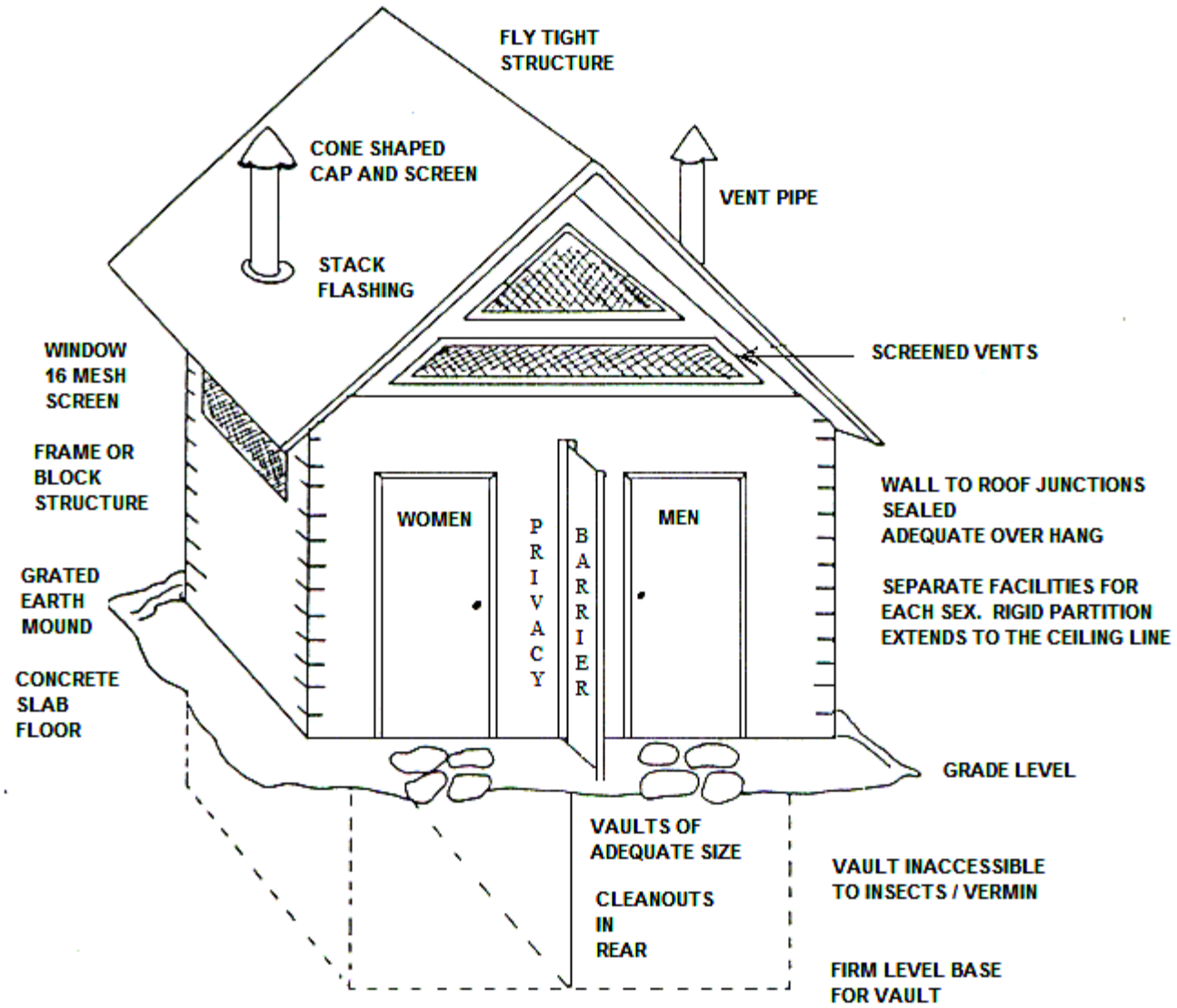

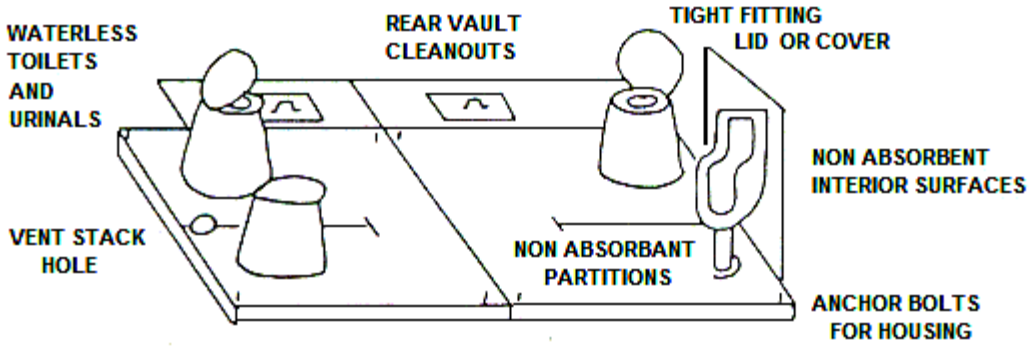

Sanitary Privy Features

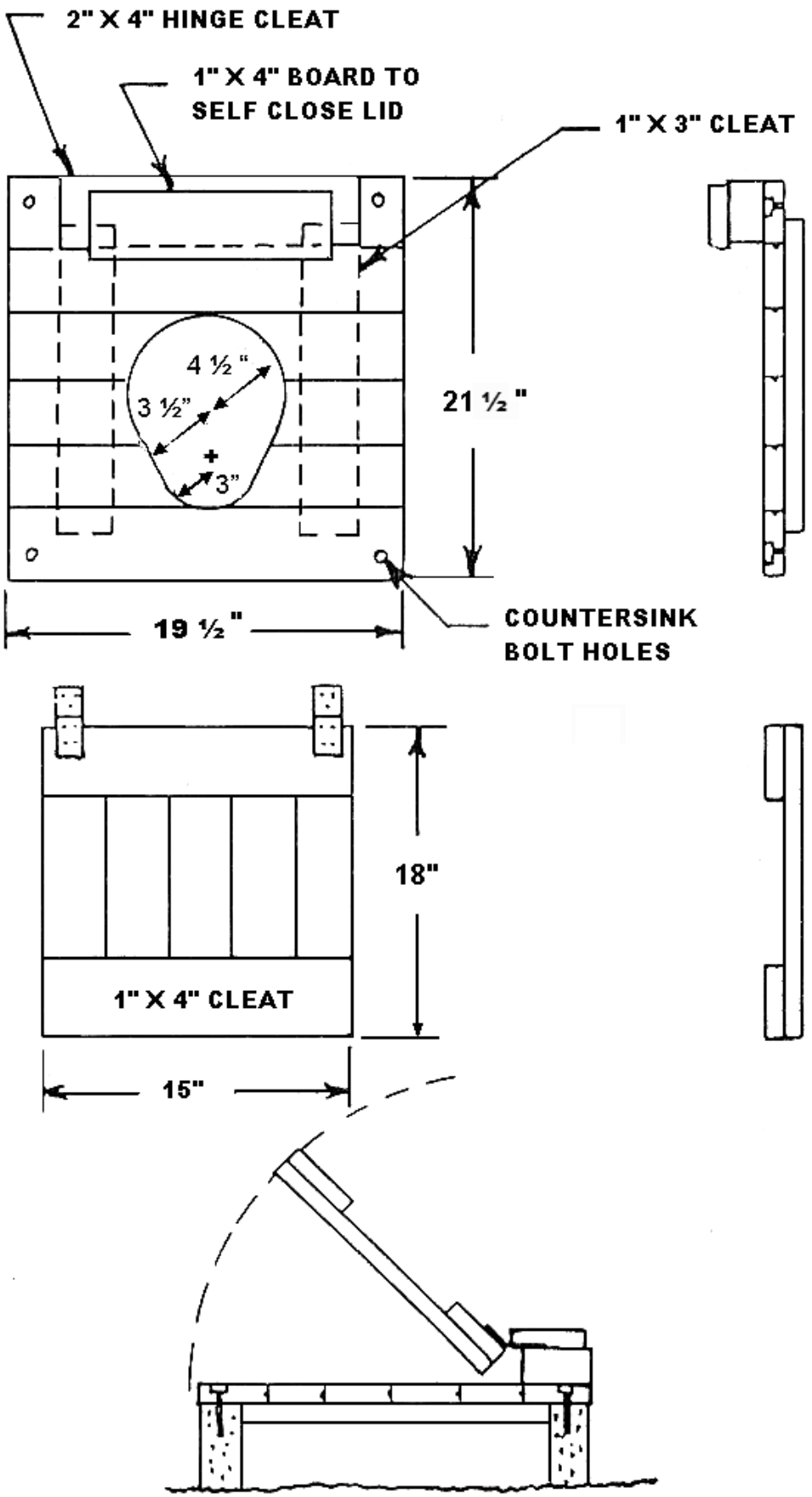

Details of Seat and Self Closing Lid

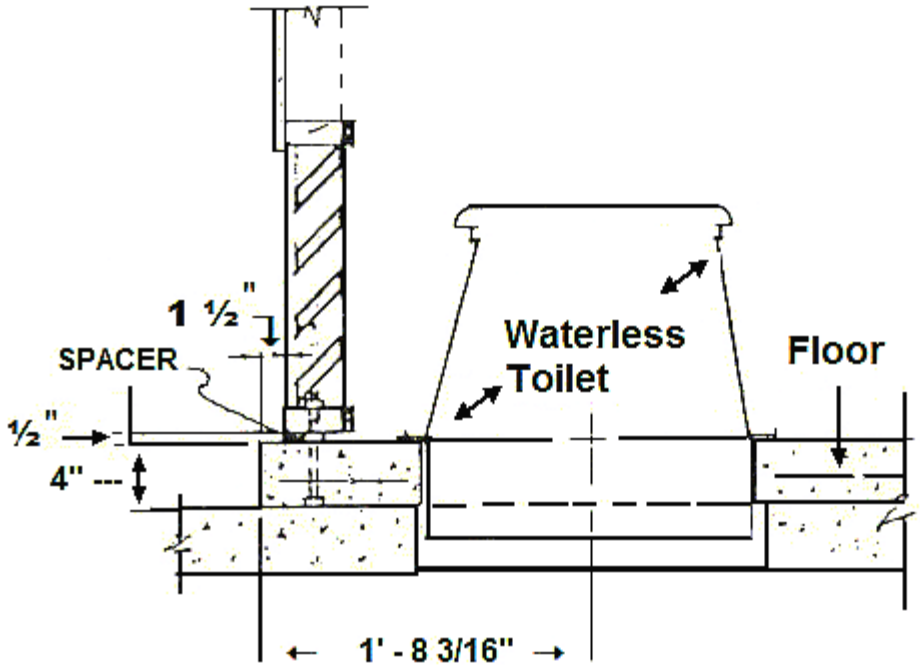

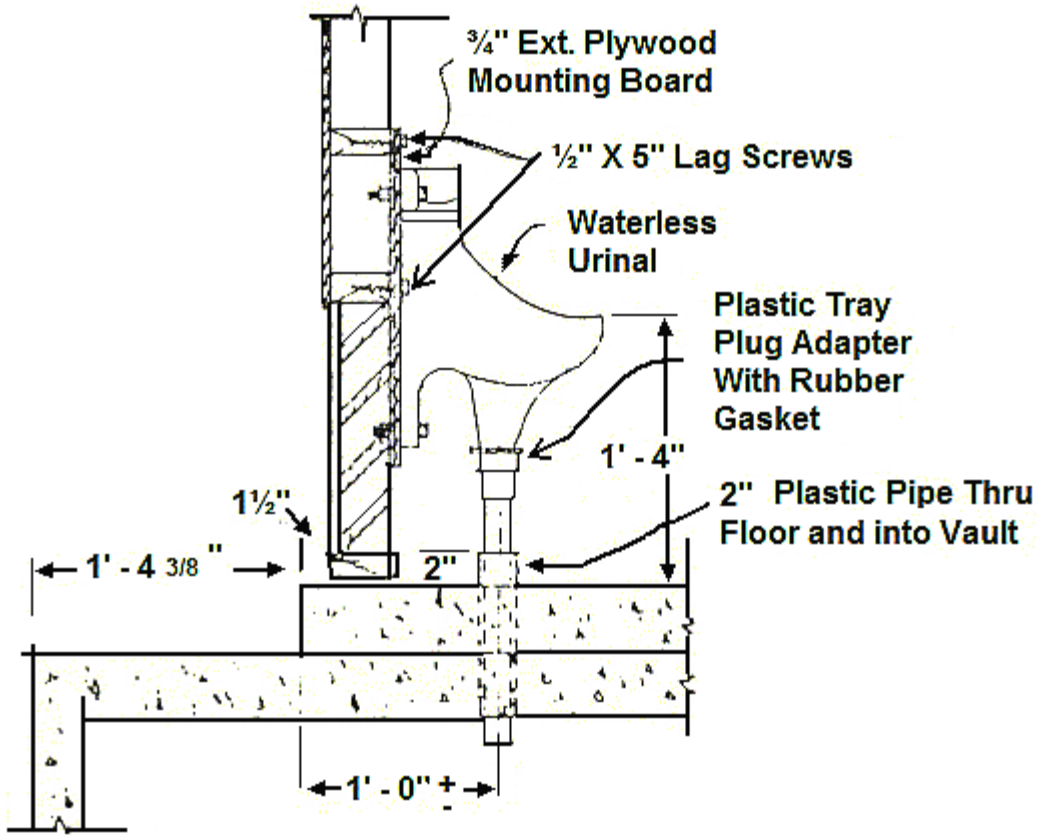

Details of Toilet Stool and Urinal Installation

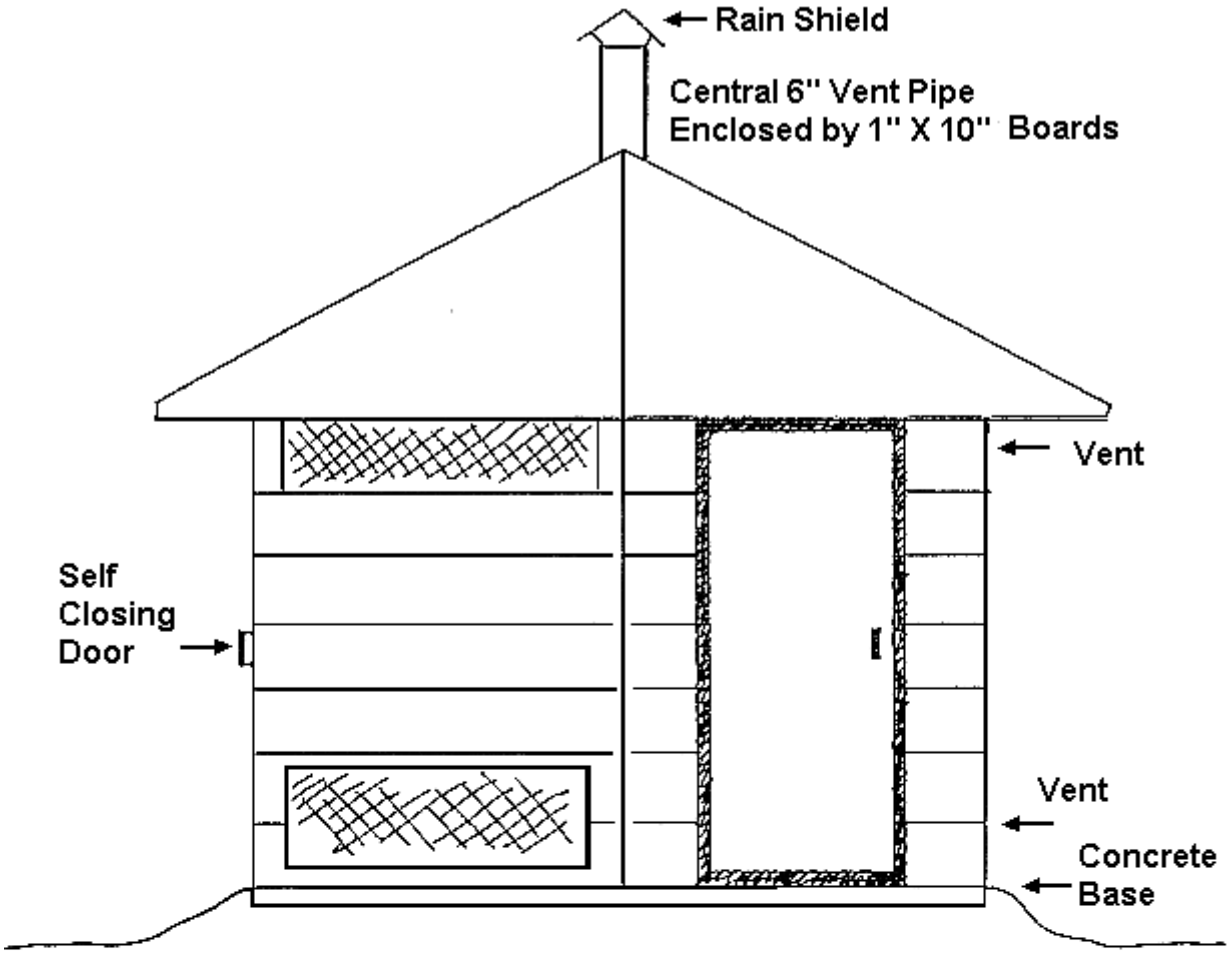

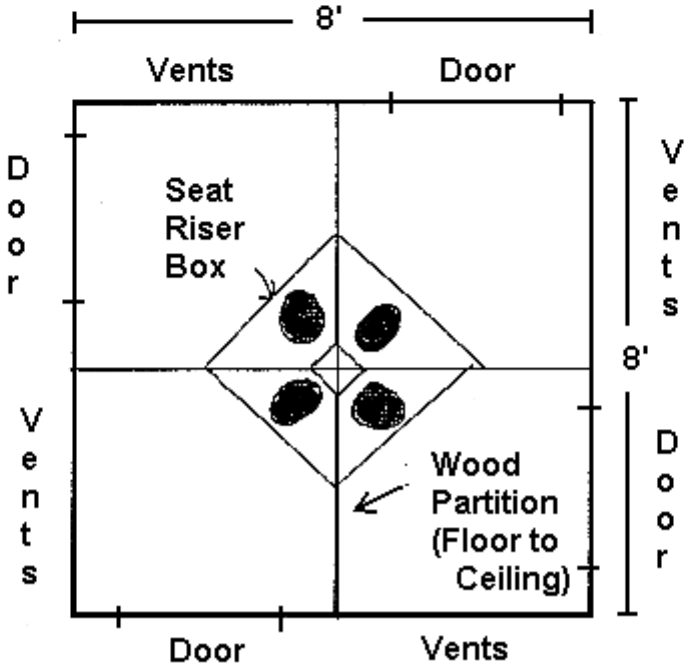

Four Seat Multiple Use Sanitary Privy

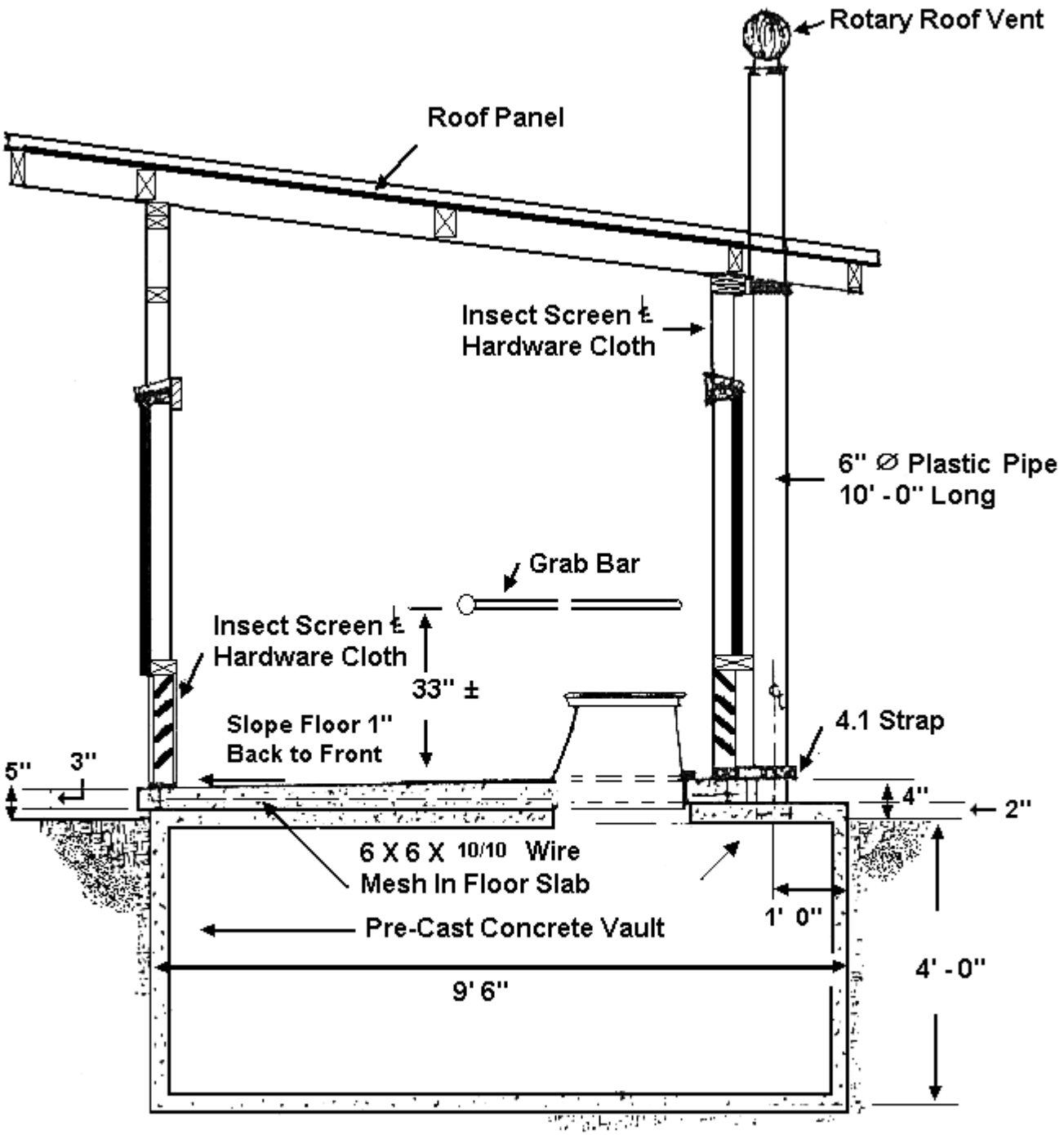

Two Seat Style Vault Privy, Side View

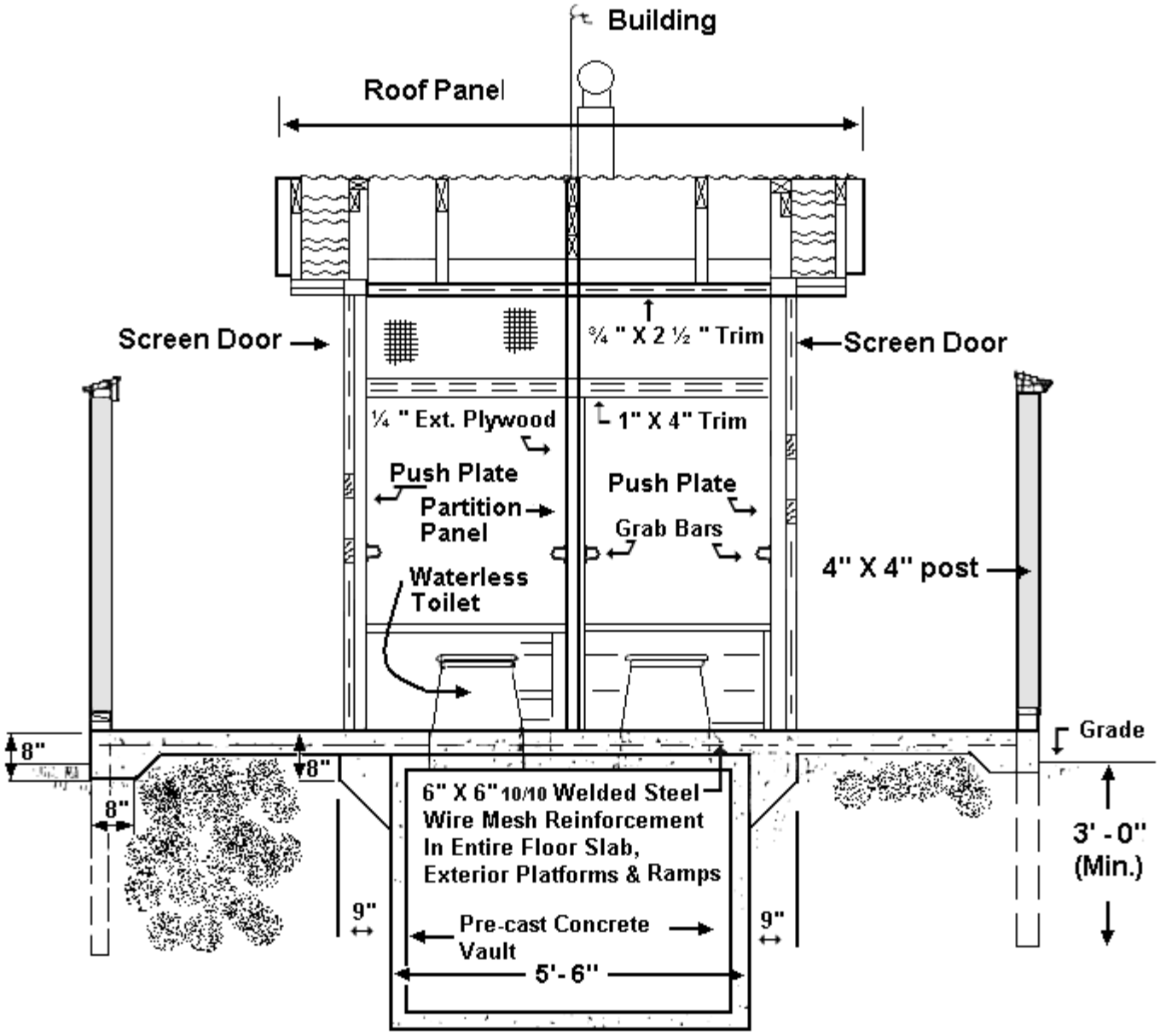

Two Seat Style Vault Privy, Front View

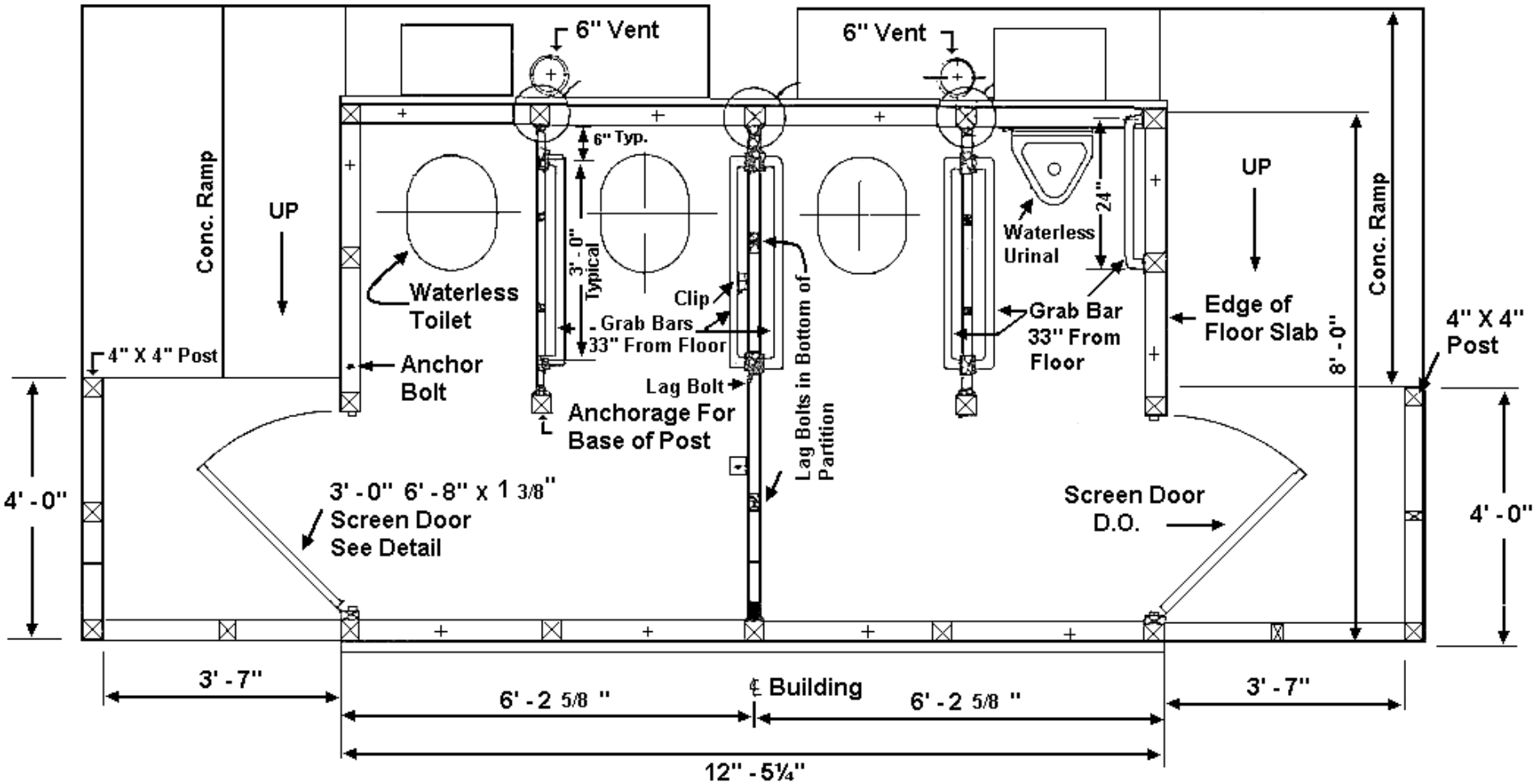

Four Fixture Style Vault Privy, Floor Plan

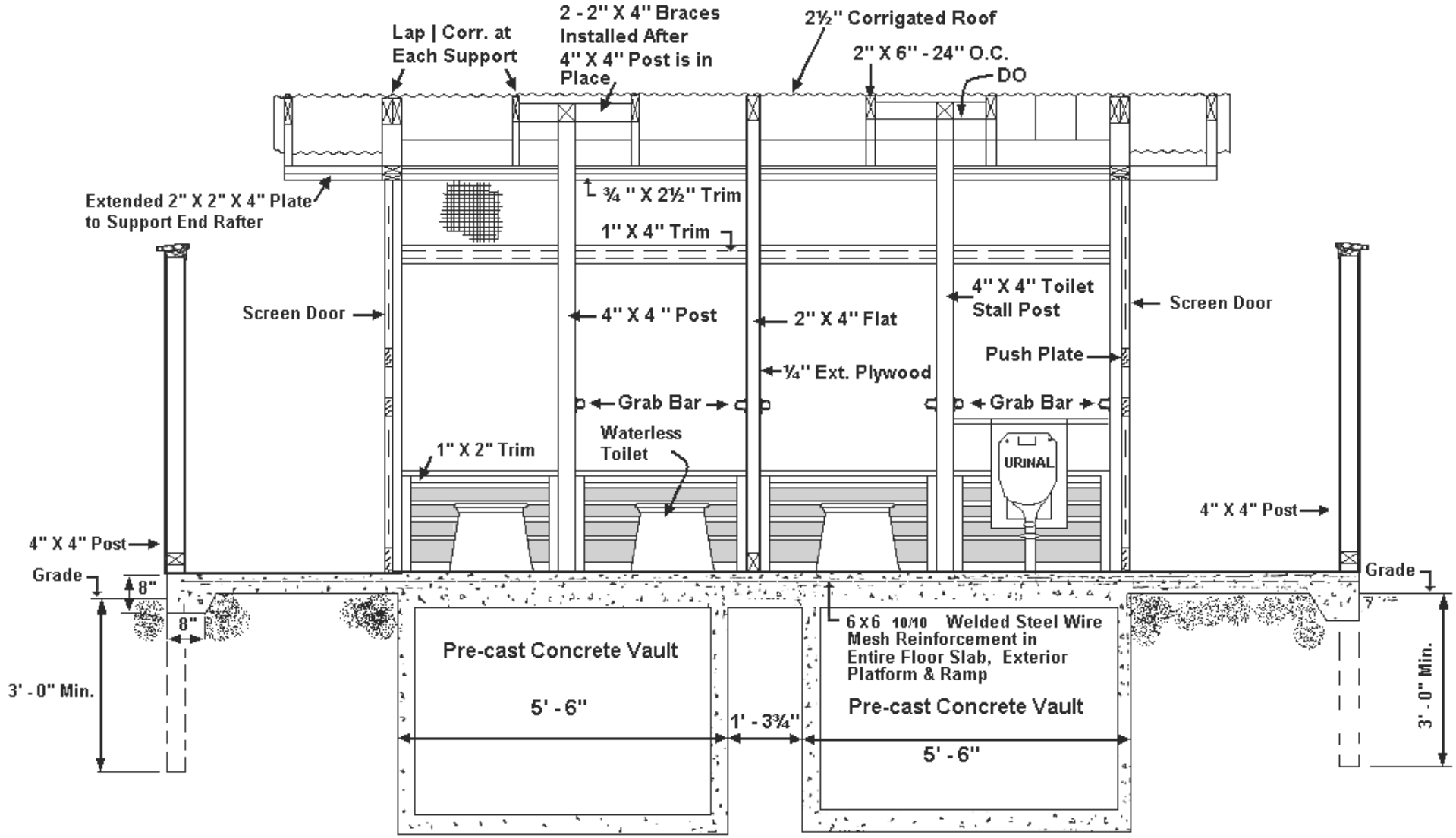

Four Fixture Style Vault Privy, Cross Section