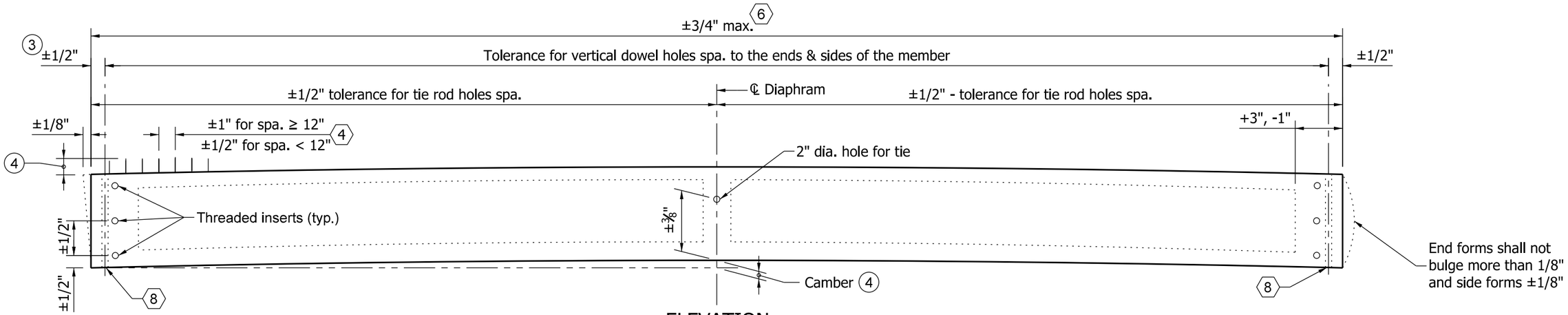

ELEVATION

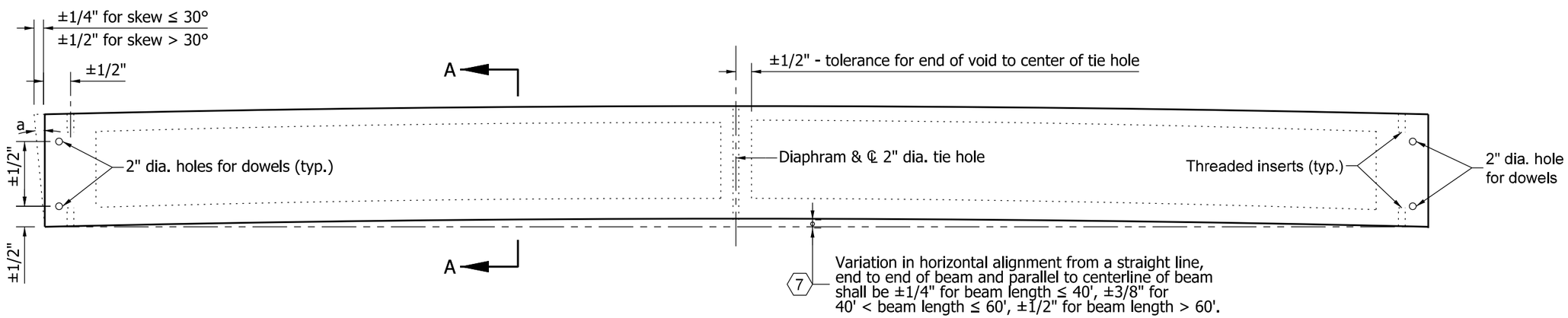

PLAN

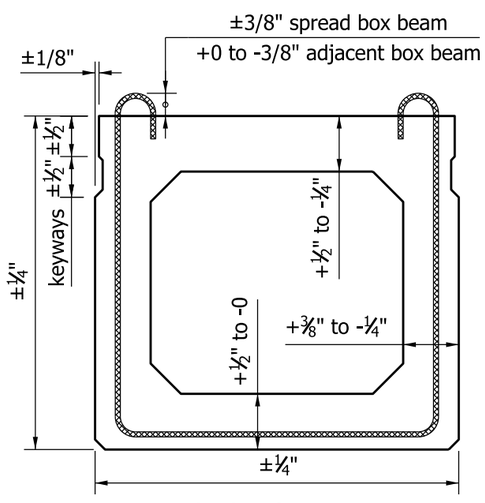

SECTION A-A

NOTES:

1. See Standard Drawing E 707-BPBF-04 for General Notes.
2. The top surface of the beam shall not vary more than 1/8" in 10' as measured from a straightedge.

(3) Tolerance of beam ends for deviation from a true vertical with respect to top and bottom surfaces.

(4) Projection above top of spread box beam shall be ±3/8". Projection above top of adjacent box beam +0 to -3/8".

INDIANA DEPARTMENT OF TRANSPORTATION

FABRICATION TOLERANCES
PRESTRESSED BOX BEAM

SEPTEMBER 2011

STANDARD DRAWING NO. E 707-BPBF-01

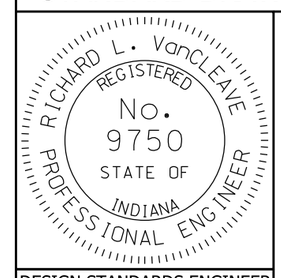

DESIGN STANDARDS ENGINEER

/s/ Richard L. VanCleave 09/01/11
DESIGN STANDARDS ENGINEER DATE

/s/ Mark A. Miller 09/01/11
CHIEF HIGHWAY ENGINEER DATE