GENERAL NOTES

1. Required additional length of L above the 185 m minimum shall be added to the length of this parallel lane segment. (Example: If required L = 220 m, then this parallel lane segment length = 125 m). See tables on Standard Drawing 401-REBS-04.
2. Ear construction type A: 2 lines of #16 bars required (Est. weight = 116 kg). Transverse sawed and sealed joint, in line with pavement contraction joint, shall extend through ear construction. The #16 bars shall be discontinued at such joints. See Detail B-B.
3. See Standard Drawing 401-REBS-03 for Section B-B.

CURVE DATA

Δ = 3°00'00"
R = 875.000 m
T = 22.929 m
L = 45.815 m
E = 0.300 m

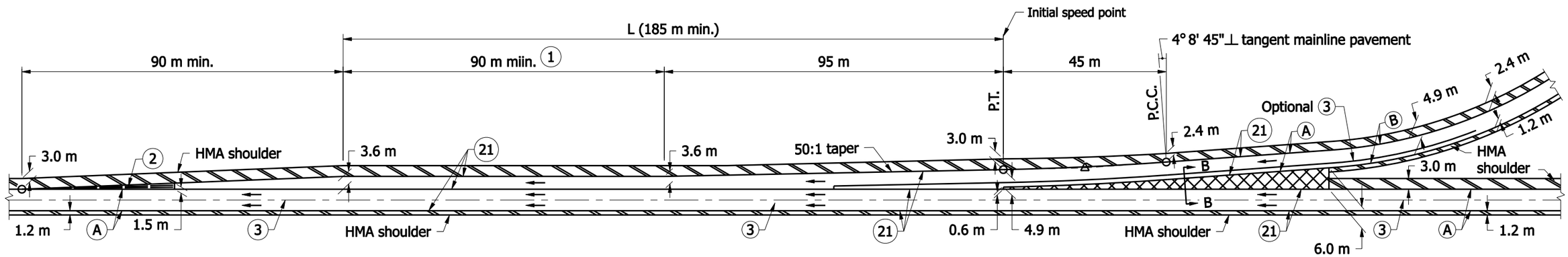

ENTRANCE

NOTES :

LEGEND

- (A) Pavement type and thickness as specified for the mainline.
- (B) Pavement type and thickness as specified for ramps.
- (3) Longitudinal joint
- (21) Longitudinal construction joint
- HMA shoulder (Thickness of mainline pavement)
- HMA shoulder (Thickness as specified on Typical Sections)

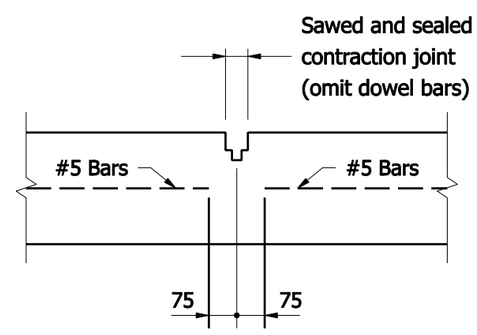

DETAIL B-B

All Dimensions are in mm unless otherwise specified.

INDIANA DEPARTMENT OF TRANSPORTATION

RAMP ENTRANCE TERMINAL HMA SHOULDER

SEPTEMBER 2008

STANDARD DRAWING NO. 401-REBS-01

RICHARD L. VanCLEAVE REGISTERED No. 9750 STATE OF INDIANA PROFESSIONAL ENGINEER

DESIGN STANDARDS ENGINEER

/s/ Richard L. VanCleave 09/02/08
DESIGN STANDARDS ENGINEER DATE

/s/ Mark A. Miller 09/02/08
CHIEF HIGHWAY ENGINEER DATE