NOTES

1. See Standard Drawing E 706-BRTX-03 for bar bending details.
2. All reinforcing bars designated "E" shall be epoxy coated.

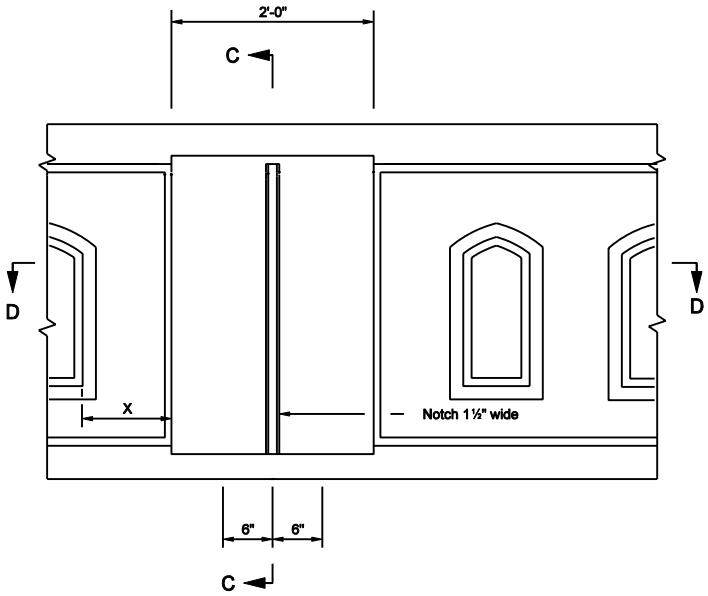

ELEVATION

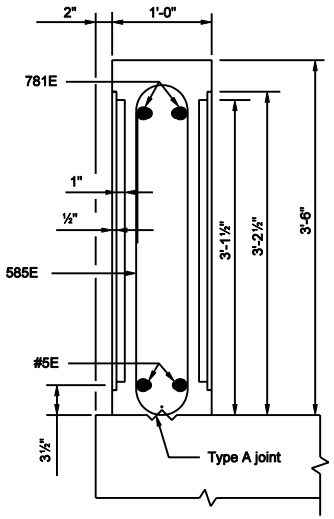

SECTION C-C

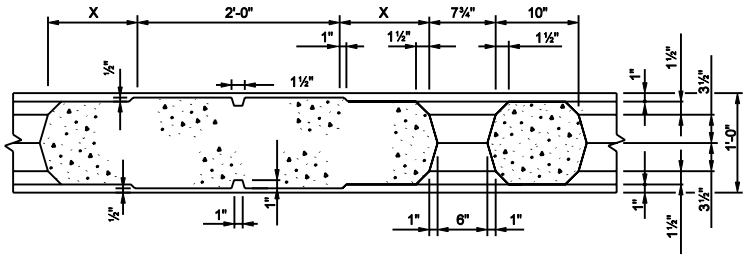

SECTION D-D

INDIANA DEPARTMENT OF TRANSPORTATION

RAILING, TX
(SPAN PILASTER)

SEPTEMBER 2003

STANDARD DRAWING NO. E 706-BRTX-02

RICHARD L. VanCLEAVE
REGISTERED
No. 9750
STATE OF INDIANA
PROFESSIONAL ENGINEER

DESIGN STANDARDS ENGINEER

/s/ Richard L. VanCleave 9-02-03
DESIGN STANDARDS ENGINEER DATE

/s/ Richard K. Smutzer 9-02-03
CHIEF HIGHWAY ENGINEER DATE