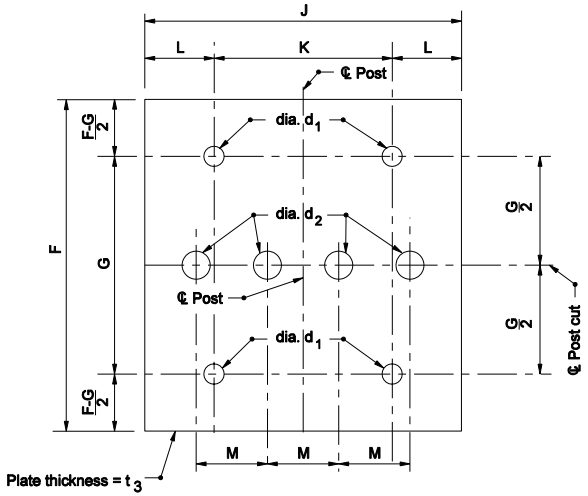

PERFORATED FUSE PLATE DETAIL (3.)

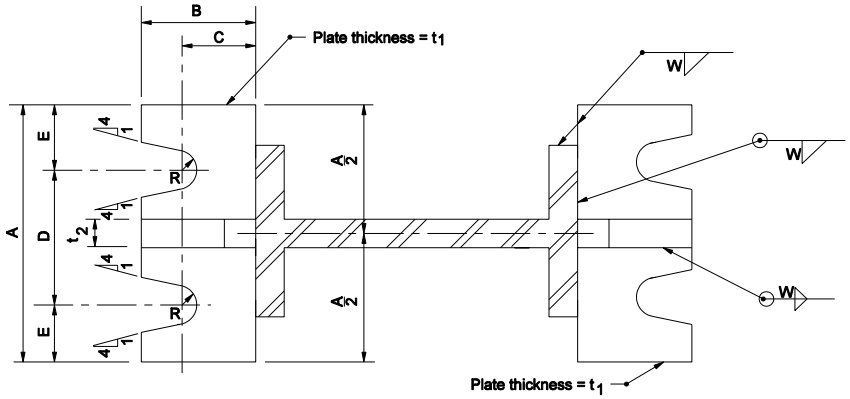

BASE PLATE DETAIL

Notes:

1. See table on Standard Drawing E 802-SNGP-05 for diminsions and weight of stiffener plate and base plate.
2. See table on Standard Drawing E 802-SNGP-06 for dimensions and weight of preforated fuse plate.
3. Use H.S. bolts with hex head, & hex nut, one flat washer under each bolt head and beveled or flat washer (where required) under nut.
4. Dimensional tolerances excluding the thickness for shims is ± 1/32".

SHIM DETAIL						
BOLT DIAMETER	L	W	N	R	S	X
½" to ¾"	1¾"	1¾"	15/32"	13/32"	13/16"	15/32"
1"	2"	2"	⅜"	⅝"	1¼"	15/32"

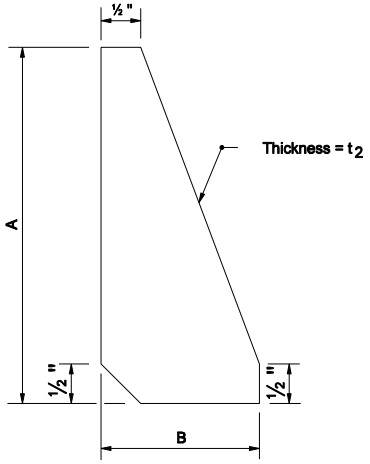

STIFFENER PLATE DETAIL

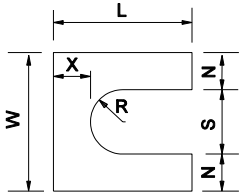

Furnish 2-0.012 ± thick and 2-0.03 ± thick shims per post.

SHIM DETAIL

INDIANA DEPARTMENT OF TRANSPORTATION

SIGN DETAILS

SEPTEMBER 2004

STANDARD DRAWING NO. E 802-SNGP-04

RICHARD L. VANCLEAVE REGISTERED No. 9750 STATE OF INDIANA PROFESSIONAL ENGINEER

DESIGN STANDARDS ENGINEER

/s/ Richard L. VanCleave 9-01-04
DESIGN STANDARDS ENGINEER DATE

/s/ Richard K. Smutzer 9-01-04
CHIEF HIGHWAY ENGINEER DATE