**NOTICE OF APPLICATION FOR FEDERAL CONSISTENCY REVIEW**
**LAKE MICHIGAN COASTAL ZONE PROGRAM**

**Project Number:** ER-18407

**Name of Applicant:** Col. Christopher T. Drew
**Address of Applicant:**
Chicago District, US Army Corps of Engineers
231 South LaSalle Street, Suite 1500
Chicago, IL 60604

**Project Description:**
Periodic maintenance dredging of the Indiana Harbor and Canal Federal Navigation Project, East Chicago

**Location of Project:** Lake Co., Indiana

**Send comments to the following no later than July 17, 2015:**

Federal Consistency Review Coordinator, Environmental Unit
Division of Fish and Wildlife
Department of Natural Resources
402 West Washington Street, Room W273
Indianapolis, IN 46204
Electronic mail: **environmentalreview@dnr.in.gov**

**Copies of the request, accompanying information and data are available for inspection at the following location:**

Environmental Unit
Division of Fish and Wildlife
Department of Natural Resources
402 West Washington Street, Room W273
Indianapolis, IN 46204

FC review

**DEPARTMENT OF THE ARMY**
CHICAGO DISTRICT, U.S. ARMY CORPS OF ENGINEERS
231 SOUTH LASALLE STREET, SUITE 1500
CHICAGO IL 60604

July 1, 2015

Technical Services Division
Design Branch
Hydraulic and Environmental Engineering Section

Environmental Unit
Division of Fish and Wildlife
Indiana Department of Natural Resources
402 West Washington Street, Room W273
Indianapolis, Indiana 46204

Dear Sir or Madam:

The U.S. Army Corps of Engineers (USACE), Chicago District, respectfully requests a General Federal Consistency Determination for periodic maintenance dredging of the Indiana Harbor and Canal Federal Navigation Project. The proposed dredging activity complies with the Indiana Coastal Zone Management Program (CZMP) and will be conducted in a manner consistent with such policies. Because this is an on-going project, the Chicago District requests a General Federal Consistency Determination for the life of the project.

Project map sheets and a fact sheet for Indiana Harbor have been enclosed along with this letter. The map sheets show the boundary limits and depths of the navigation project, and the fact sheet provides background information and describes the main project features. The maps, channel surveys, and fact sheet information for Indiana Harbor, as well as for the other Great Lakes harbors, are periodically updated, and the information is presently available at following website: http://www.lre.usace.army.mil/Missions/GreatLakesNavigation.aspx.

Prior to 2012, Indiana Harbor had not been dredged since 1972 due to lack of a suitable place to dispose of the sediment. During the years 2012 through 2014, approximately 100,000 cubic yards (CY) to 320,000 CY has been dredged annually. After all backlog material is dredged from the canal, USACE expects that the maximum amount of material to be dredged during a one-year, annual time period would be approximately 300,000 CY, though this is a high estimate. Typical annual dredging events are expected to remove around 100,000 CY to 150,000 CY to keep up with shoaling. The amount of shoaling can be affected by a number of different factors, such as erosion, land use, storm events, high winds and current, ship and barge traffic, upstream discharges, and other factors. Annual maintenance dredging may be temporarily suspended for a year or more due to budget constraints, high water levels, or other operational or logistical considerations, so a large dredging event may be needed to remove the accumulated shoaling when dredging resumes.

RECEIVED JUL 06 2015

The State of Indiana Department of Natural Resources has issued two permits for Indiana Harbor Dredging: Construction in a Floodway (FW-26069) and Lake Michigan (LM-171), both of which expire in 2016. USACE will not be applying for renewal of these permits, though conditions of the permit will continue to be followed, including notification of dredging, submission of annual dredging event reports, and related conditions. Discharge from the CDF by an on-site wastewater treatment plant is regulated by the Section 402 NPDES Permit issued by the Indiana Department of Environmental Management (IN0062511), which will continue to be maintained. Any significant changes to the Indiana Harbor and Canal Federal Navigation Project will be coordinated with your agency in accordance with the National Environmental Policy Act (NEPA).

If you have any questions concerning this letter, please feel free to contact Ben O'Neil at (312) 846-5509, by e-mail to Benjamin.R.ONeil@usace.army.mil, or at the address above.

Sincerely,

Christopher T. Drew
Colonel, U.S. Army
District Commander

Enclosures

US Army Corps of Engineers

Great Lakes Navigation System

# Indiana Harbor, IN - Indiana Confined Disposal Facility

## Project Description

- Navigation Project Served: Indiana Harbor and Canal
- The facility is owned and operated by the Chicago District, U.S. Army Corps of Engineers.
- The Indiana CDF is an upland facility attached in East Chicago, IN. The CDF is located on the north side of the Lake George Branch canal, immediately west of Indianapolis Boulevard.
- The Indiana Harbor CDF has an area of 96 acres; a current constructed capacity of 2,100,000 cubic yards, and receives about 200,000 cubic yards annually. Future dike expansion could expand the capacity of the facility to 4,800,000 cubic yards. Approximately 610,000 cubic yards of dredged material has been placed into the facility since it opened in 2011.
- Non-Federal interests may use this disposal facility if they are located in the areas identified within the original project authorization. Non-Federal users must demonstrate that the material being provided is environmentally consistent or superior to the material already confined, and will pay a tipping fee.

## Project Authority

- The facility was completed in 2011 under authority from the Rivers and Harbors Acts of 1910, 1930, 1935, 1937 and 1960, WRDA 1986 and 1996, and the Emergency Supplemental Appropriations Act dated 12 May 2005.

## Beneficial Use Information

- Sediment from the Indiana Harbor and Canal is highly contaminated due to the very high anthropogenic compound concentrations; the channel has sediment with up to 10% by weight oil and grease, and includes 5 locations with TSCA regulated material. The dredged material confined within this facility is not suitable for beneficial reuse.

## Congressional Interest

- Representative Peter Visclosky D-IN-1
- Senator Daniel Coats R-IN
- Senator Joe Donnelly D-IN


**U.S. ARMY CORPS OF ENGINEERS - CHICAGO DISTRICT**

231 S. LaSalle St, Suite 1500, Chicago, IL 60604

http://www.lrc.usace.army.mil

**Contact: 312-846-5330,** chicagodistrict.pao@usace.army.mil



Last Updated: 11-Feb-15

US Army Corps of Engineers

Great Lakes Navigation System

# Indiana Harbor, IN

## Project Features

- Located on Lake Michigan in the City of East Chicago, Lake County, Indiana.
- Authorized depths are -29 ft. L.W.D in the approach channel, -28 ft. in the turning basin, -27 ft. in the outer dock area, and -22 ft. within the main and two branch channels.
- 4.7 miles of Federal Channel combined within the Indiana Harbor Canal, the Calumet River Branch, and the Lake George Branch.
- 3,085 linear feet of laid-up stone and concrete caisson breakwater structures.
- A confined disposal facility (CDF) with a storage capacity of 4.8M CY.
- Five year average (2008-2012) tonnage is 11.8M tons of material shipped and received; 42nd leading U.S. port in 2012; 5th on the Great Lakes.
- Interconnected with 76 commercial ports: ships to 39 ports, and receives from 37 ports.
- Major stakeholders: ArcelorMittal Steel, US Gypsum, LaFarge Cement, and Amoco.

## Project Requirements

- The project had not been dredged since 1972. Average shoaling depth within the channel areas is 4.0'. Dredging efforts began in 2012.
- FY14 funds removed 210,000 CY from Federal channel areas. FY15 funds will remove 340,000 CY from Federal channel areas, including 60,000 CY of TSCA materials. Additional dredging in non-Federal areas will also be completed during FY15 with funds from ArcelorMittal.
- Initial dredging efforts increased the operational costs of the CDF during FY13 and FY14. Until sufficient dredged material is placed on the bottom of both CDF cells, the rate of water infiltration below is very high. CDF groundwater pumping must then be performed to protect regional groundwater resources, and maintain the inward gradient required by the facility operating permit. Dredging efforts in FY14 will provide sufficient material to achieve the seal, and reducing future groundwater pumping needs and operational costs.

## Consequences of Not Maintaining the Project

- Light loading losses of between 3-4 feet of channel depth results in increased transportation costs of between $10.7M and $15.4M annually.
- Reduction of bulk commodities that pass through the harbor and generate $332.M annually in direct revenue while supporting 1,495 direct, indirect, and induced jobs that produce over $263.M per year in personal income.
- If the harbor was closed to commercial traffic, commodities would have to be transported by rail and truck. This would increase annual emission rates by over 48,900 tons of harmful particulate matter (PM-10) and increase costs by $4.9M due to increased railroad related accidents, and $222.K due to increased trucking related accidents.

## Transportation Importance

- Commodities are iron ore, limestone, coke, gypsum, steel, cement and concrete, petroleum products, and miscellaneous bulk products.
- ArelorMittal's Indiana Harbor facility is the largest steelmaking complex in N. America. It is fully integrated, operating five blast furnaces, and has a total raw steelmaking capability of 10M tons annually. It produces hot-rolled, cold-rolled and hot-dipped galvanized sheet products. Markets served include automotive, appliance, agricultural, construction, line and pipe tube, electrical/motor lamination, converters and steel service centers.

## U.S. Army Corps of Engineers Fiscal Year (FY) 2014, 2015 and 2016
## Indiana Harbor, IN - Project Requirements and President's Budget ($1,000)

| Work Packages | FY14 Requirement | FY14 Appropriation | FY15 Requirement | FY15 Appropriation | FY16 Requirement | FY16 President's Budget |
|---|---|---|---|---|---|---|
| Project Condition Surveys | 178 | 178 | 187 | 187 | 191 | 191 |
| CDF Site Operations | 4,677 | 5,016 | 5,597 | 5,597 | 4,660 | 4,660 |
| CDF Annual Maintenance | | | | | 590 | 590 |
| Periodic Assessment of CDF perimeter dikes for Dam Safety | | | 75 | 75 | | |
| Maintenance Dredging of Federal Harbor Channel – Primary work package | 5,340 | 4,891 | 7,155 | 7,155 | 4,083 | 4,083 |
| Maintenance Dredging of Federal Harbor Channel – Backlog work package | 2,750 | | 2,750 | | 2,800 | |
| Structural repairs to Easterly Breakwater (by Gov't. Floating Plant) | 778 | 778 | 800 | 800 | 1,815 | 1,815 |
| **TOTAL** | **13,723** | **10,863** | **16,564** | **13,814** | **14,139** | **11,339** |

**Congressional Interests**

- Representative Peter J. Visclosky, D-IN-1
- Senator Daniel Coats, R-IN
- Senator Joe Donnelly, D-IN

## NOTES

1. THE SOUNDINGS INDICATED HEREON REPRESENT THE MINIMUM DEPTH FOUND IN THE 10 FOOT BY 10 FOOT AREA CENTERED AROUND THE TEXT. MINIMUM DEPTH DATA IS PRODUCED FOR STRIKE/SHOAL REMOVAL OPERATIONS AND NOTICES TO NAVIGATION INTERESTS.
2. ELEVATIONS AND SOUNDING DEPTHS ARE REFERRED TO INTERNATIONAL GREAT LAKES DATUM 1985 (IGLD 85). LOW WATER DATUM ZERO IS 577.5 FEET ABOVE MEAN WATER LEVEL AT POINT RIMOUSKI QUEBEC. WATER LEVEL READINGS ARE FROM AN AUTOMATED GAUGE LOCATED AT INDIANA HARBOR STATION (80-5). DEPTHS ARE MEASURED USING AN R2SONIC 2024 MULTIBEAM SONAR.
3. THE INFORMATION DEPICTED ON THIS MAP REPRESENTS THE RESULTS OF SURVEYS MADE ON APRIL 18, 2015 AND CAN ONLY BE CONSIDERED AS INDICATING THE GENERAL CONDITIONS PRESENT AT THE TIME.
4. HORIZONTAL POSITIONING IS DETERMINED USING THE DIFFERENTIAL GLOBAL POSITIONING SYSTEM (DGPS). THE DIFFERENTIAL CORRECTIONS ARE PROVIDED BY U.S. COAST GUARD DIFFERENTIAL BROADCAST STATIONS. SIGNAL STRENGTH IS USED AS THE DETERMINING FACTOR IN DIFFERENTIAL SELECTION. THE DGPS RECEIVER IS MANUFACTURED APPLANIX MARINE POS/MV VER 4.0
5. GRID COORDINATES ARE BASED ON THE INDIANA STATE PLANE COORDINATE SYSTEM, TRANSVERSE MERCATOR PROJECTION, INDIANA WEST ZONE (1302), NORTH AMERICAN DATUM 1983 (NAD83). ALL COORDINATES SHOWN ARE IN U.S.SURVEY FEET.
6. UNLESS OTHERWISE NOTED PROJECT DEPTH IS 29.0' BELOW LOW WATER DATUM.

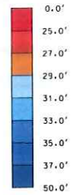


LAKE MICHIGAN

100' 50' 0 100' 200'

SCALE: 1"=100'

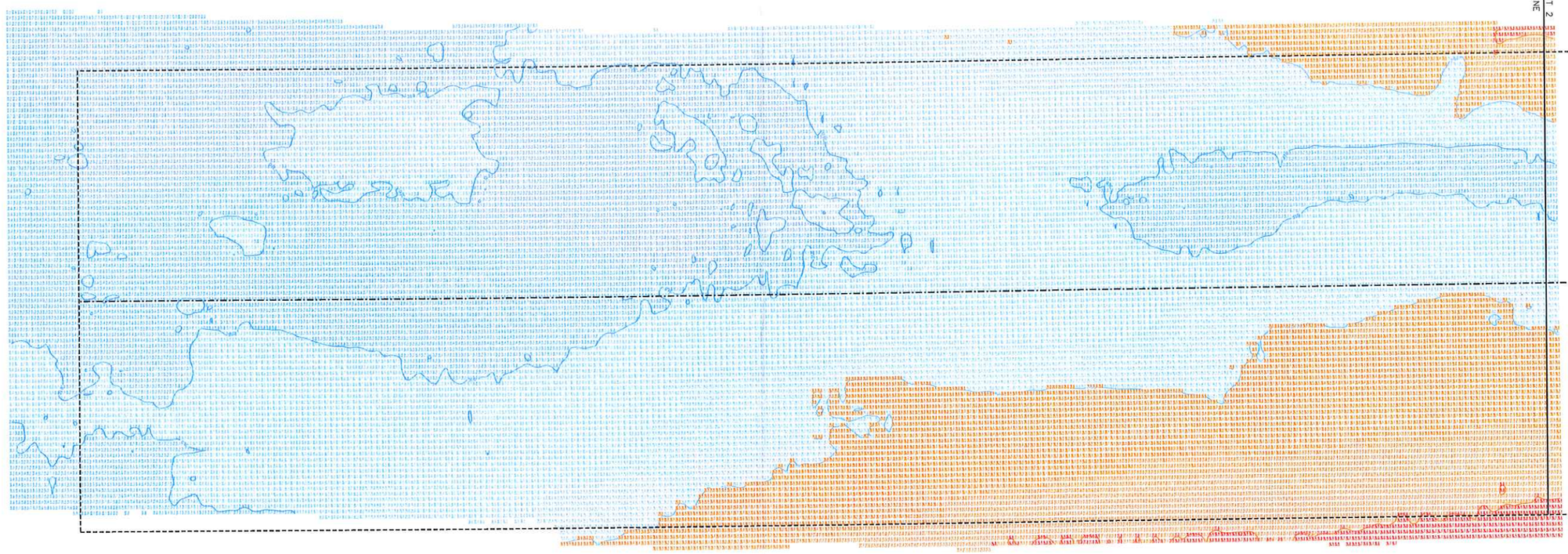


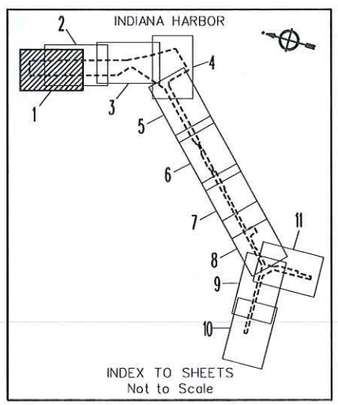


INDEX TO SHEETS
Not to Scale

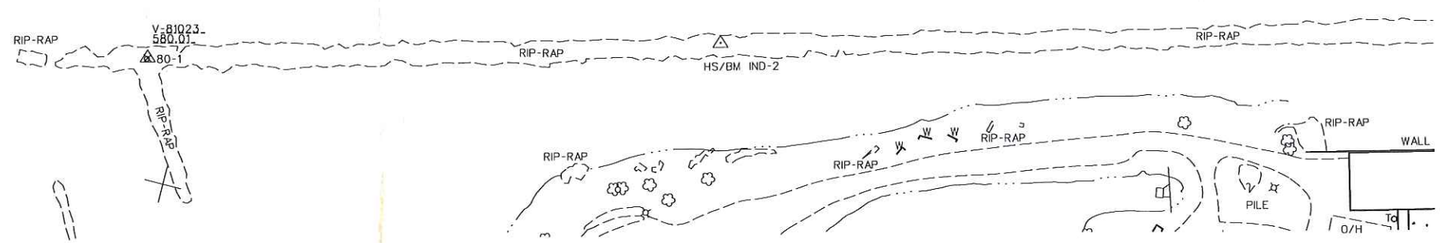


US Army Corps of Engineers
Chicago District

| Symbol | Description | Date | Appr. |
|---|---|---|---|
| | | | |

| Symbol | Description | Date | Appr. |
|---|---|---|---|
| | | | |

U.S. ARMY ENGINEER DISTRICT
CORPS OF ENGINEERS
CHICAGO, ILLINOIS

Survey Date: April 18, 2015
Rev.
Design file name:
Drawing code:
Surveyed by: J. Wozek
Drn by: J.S.M.
Ckd by:
Reviewed by:
Chief, Fac. Mgmt.
Submitted by:
Chief, Sub Section
File name: Plot date: 6-13-15
Plot scale:

Approval Recommended:
Area Eng. Sub Office
Approved by:
District Engineer

CHICAGO DISTRICT
FEDERAL NAVIGATION CHANNEL
INDIANA HARBOR

INDIANA HARBOR
FY-15 CONDITION SURVEY

Sheet reference number:
IND-1
Sheet 01 of 11

## NOTES

1. THE SOUNDINGS INDICATED HEREON REPRESENT THE MINIMUM DEPTH FOUND IN THE 10 FOOT BY 10 FOOT AREA CENTERED AROUND THE TEXT. MINIMUM DEPTH DATA IS PRODUCED FOR STRIKE/SHOAL REMOVAL OPERATIONS AND NOTICES TO NAVIGATION INTERESTS.
2. ELEVATIONS AND SOUNDING DEPTHS ARE REFERRED TO INTERNATIONAL GREAT LAKES DATUM 1985 (IGLD 85). LOW WATER DATUM ZERO IS 577.5 FEET ABOVE MEAN WATER LEVEL AT POINT RIMOUSKI QUEBEC. WATER LEVEL READINGS ARE FROM AN AUTOMATED GAUGE LOCATED AT INDIANA HARBOR STATION (80-5). DEPTHS ARE MEASURED USING AN R2SONIC 2024 MULTIBEAM SONAR.
3. THE INFORMATION DEPICTED ON THIS MAP REPRESENTS THE RESULTS OF SURVEYS MADE ON APRIL 28, 2015 AND CAN ONLY BE CONSIDERED AS INDICATING THE GENERAL CONDITIONS PRESENT AT THE TIME.
4. HORIZONTAL POSITIONING IS DETERMINED USING THE DIFFERENTIAL GLOBAL POSITIONING SYSTEM (DGPS). THE DIFFERENTIAL CORRECTIONS ARE PROVIDED BY U.S. COAST GUARD DIFFERENTIAL BROADCAST STATIONS. SIGNAL STRENGTH IS USED AS THE DETERMINING FACTOR IN DIFFERENTIAL SELECTION. THE DGPS RECEIVER IS MANUFACTURED APPLANIX MARINE POS/MV VER 4.0
5. GRID COORDINATES ARE BASED ON THE INDIANA STATE PLANE COORDINATE SYSTEM, TRANSVERSE MERCATOR PROJECTION, INDIANA WEST ZONE (1302), NORTH AMERICAN DATUM 1983 (NAD83). ALL COORDINATES SHOWN ARE IN U.S.SURVEY FEET.
6. UNLESS OTHERWISE NOTED PROJECT DEPTH IS 29.0' BELOW LOW WATER DATUM.

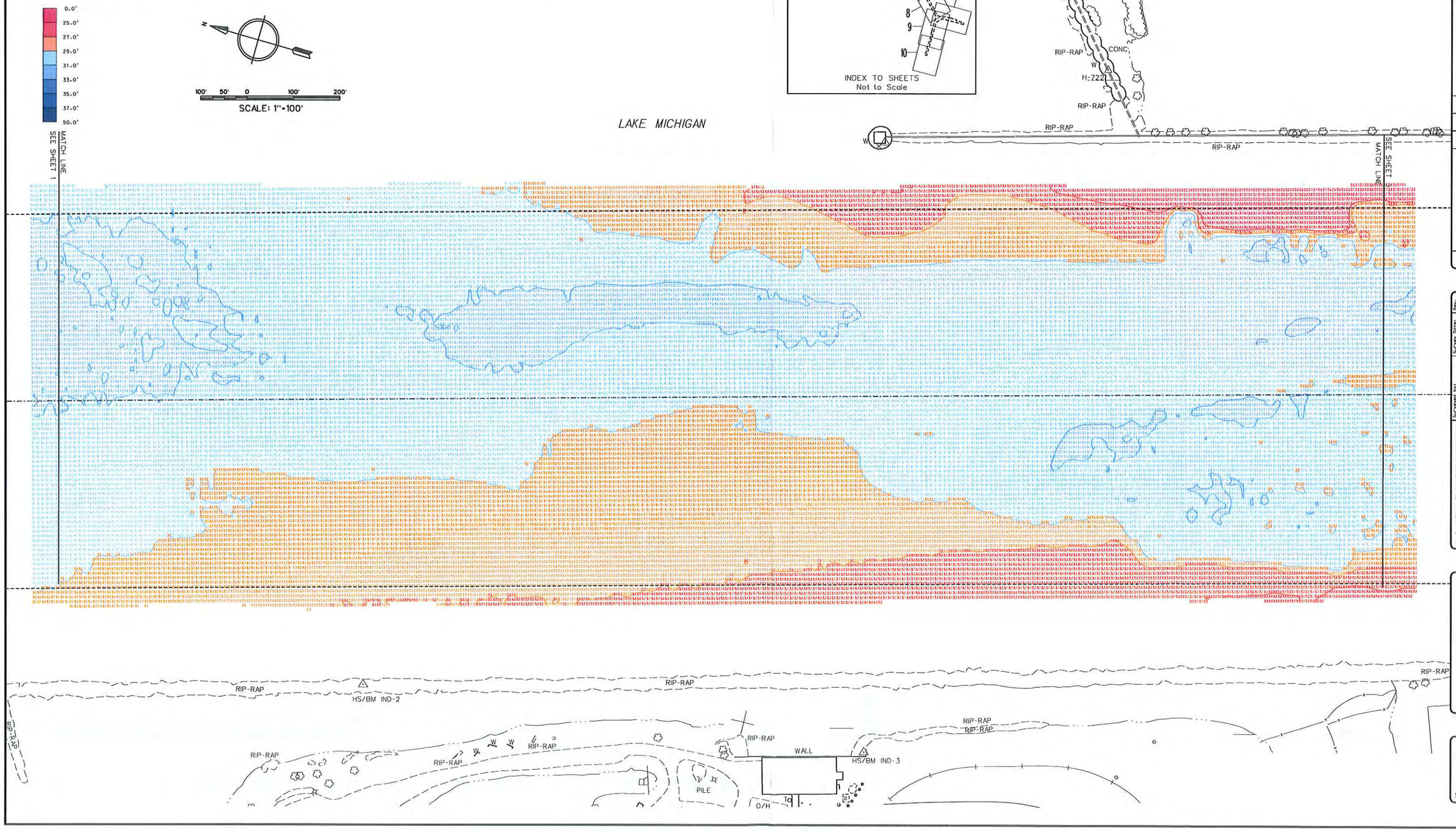


US Army Corps of Engineers
Chicago District

U.S. ARMY ENGINEER DISTRICT
CORPS OF ENGINEERS
CHICAGO, ILLINOIS

CHICAGO DISTRICT
FEDERAL NAVIGATION CHANNEL
INDIANA HARBOR

INDIANA HARBOR
FY-15 CONDITION SURVEY

Sheet reference number:
IND-2
Sheet 02 of 11

NOTES

1. THE SOUNDINGS INDICATED HEREON REPRESENT THE MINIMUM DEPTH FOUND IN THE 10 FOOT BY 10 FOOT AREA CENTERED AROUND THE TEXT. MINIMUM DEPTH DATA IS PRODUCED FOR STRIKE/SHOAL REMOVAL OPERATIONS AND NOTICES TO NAVIGATION INTERESTS.

2. ELEVATIONS AND SOUNDING DEPTHS ARE REFERRED TO INTERNATIONAL GREAT LAKES DATUM 1985 (IGLD 85). LOW WATER DATUM ZERO IS 577.5 FEET ABOVE MEAN WATER LEVEL AT POINT RIMOUSKI QUEBEC. WATER LEVEL READINGS ARE FROM AN AUTOMATED GAUGE LOCATED AT INDIANA HARBOR STATION (80-5). DEPTHS ARE MEASURED USING AN R2SONIC 2024 MULTIBEAM SONAR.

3. THE INFORMATION DEPICTED ON THIS MAP REPRESENTS THE RESULTS OF SURVEYS MADE ON APRIL 20, 2015 AND CAN ONLY BE CONSIDERED AS INDICATING THE GENERAL CONDITIONS PRESENT AT THE TIME.

4. HORIZONTAL POSITIONING IS DETERMINED USING THE DIFFERENTIAL GLOBAL POSITIONING SYSTEM (DGPS). THE DIFFERENTIAL CORRECTIONS ARE PROVIDED BY U.S. COAST GUARD DIFFERENTIAL BROADCAST STATIONS. SIGNAL STRENGTH IS USED AS THE DETERMINING FACTOR IN DIFFERENTIAL SELECTION. THE DGPS RECEIVER IS MANUFACTURED APPLANIX MARINE POS/MV VER 4.0

5. GRID COORDINATES ARE BASED ON THE INDIANA STATE PLANE COORDINATE SYSTEM, TRANSVERSE MERCATOR PROJECTION, INDIANA WEST ZONE (1302), NORTH AMERICAN DATUM 1983 (NAD83). ALL COORDINATES SHOWN ARE IN U.S.SURVEY FEET.

6. UNLESS OTHERWISE NOTED PROJECT DEPTH IS 28.0' BELOW LOW WATER DATUM.

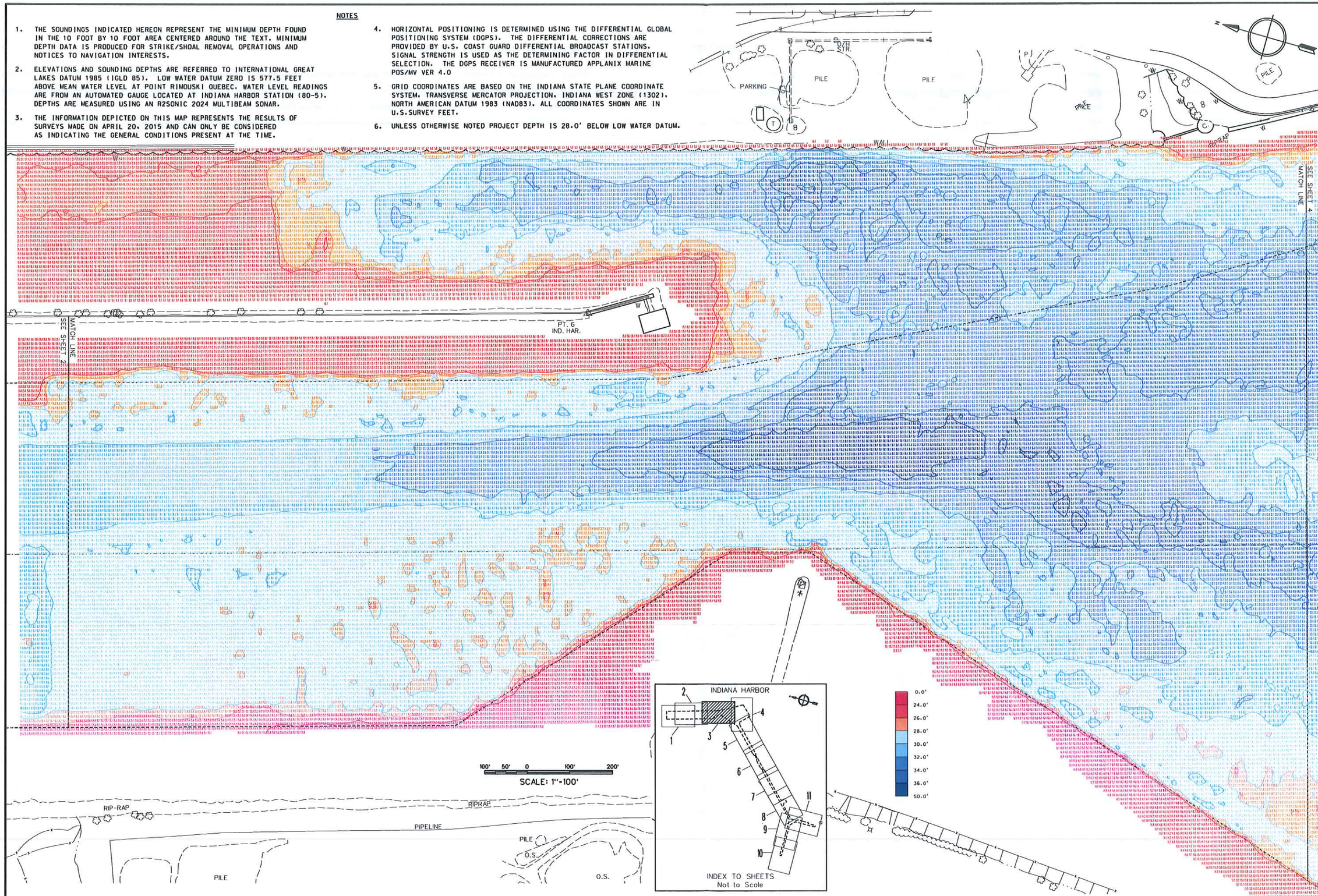


US Army Corps of Engineers
Chicago District

| Symbol | Description | Date | Appr. | Symbol | Description | Date | Appr. |
|---|---|---|---|---|---|---|---|

U.S. ARMY ENGINEER DISTRICT
CORPS OF ENGINEERS
CHICAGO, ILLINOIS

Surveyed by
Contractor
Dwn by: J.S.M.
Chd by:
Approval Recommended by:
Rev. Eng. Spec. Office
Reviewed by:
Approved by:
District Engineer
Rev. Eng. Hydro.
Submitted by:
Chief, Eng. Hydro. Section
Survey date: 20150415
Design file name:
Drawing code:
File name: 13-15 plan access lat100
Rev.

CHICAGO DISTRICT
FEDERAL NAVIGATION CHANNEL
INDIANA HARBOR

INDIANA HARBOR
FY-15 CONDITION SURVEY

Sheet reference number:
IND-3
Sheet 03 of 11

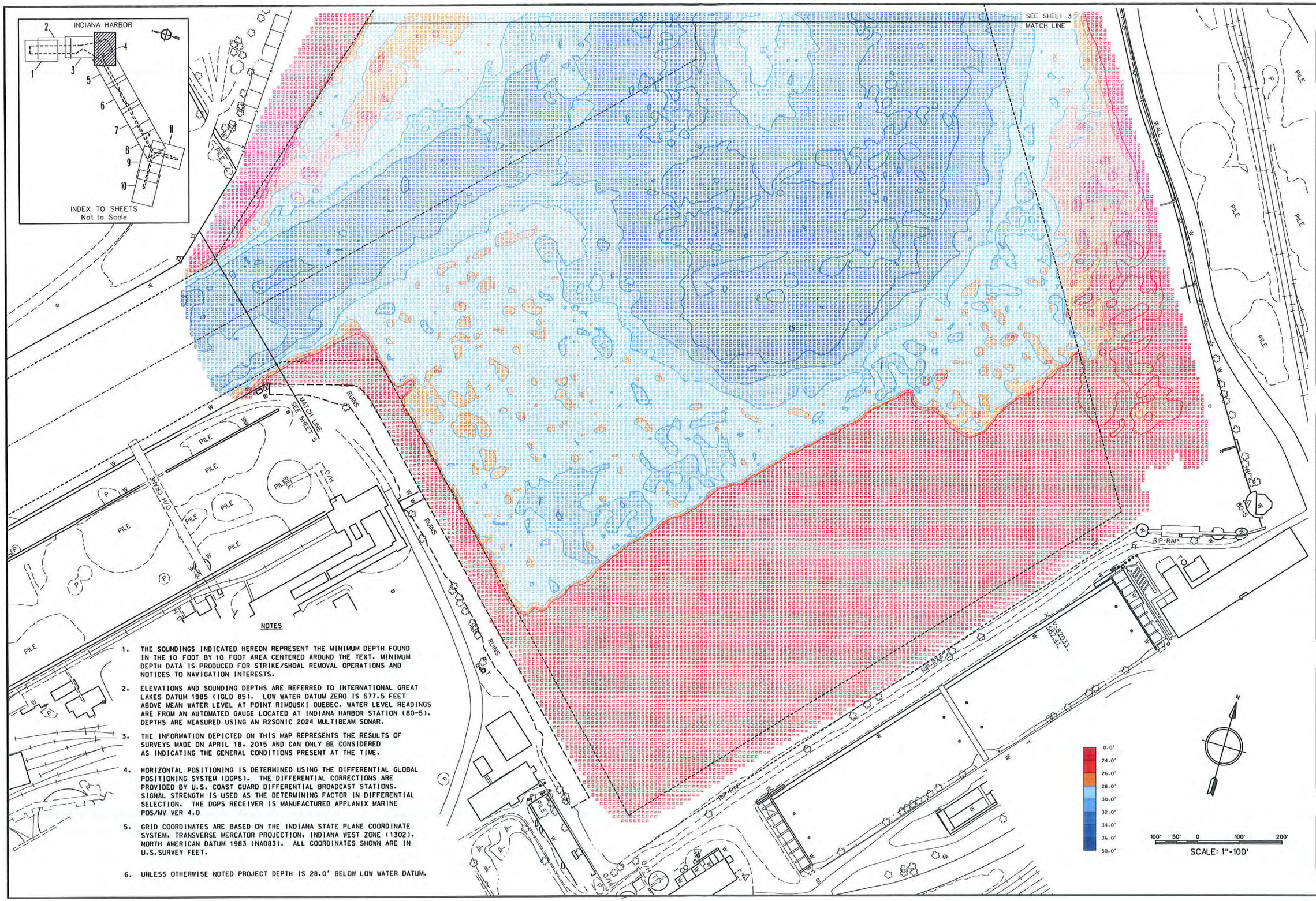


## NOTES

1. THE SOUNDINGS INDICATED HEREON REPRESENT THE MINIMUM DEPTH FOUND IN THE 10 FOOT BY 10 FOOT AREA CENTERED AROUND THE TEXT. MINIMUM DEPTH DATA IS PRODUCED FOR STRIKE/SHOAL REMOVAL OPERATIONS AND NOTICES TO NAVIGATION INTERESTS.
2. ELEVATIONS AND SOUNDING DEPTHS ARE REFERRED TO INTERNATIONAL GREAT LAKES DATUM 1985 (IGLD 85). LOW WATER DATUM ZERO IS 577.5 FEET ABOVE MEAN WATER LEVEL AT POINT RIMOUSKI QUEBEC. WATER LEVEL READINGS ARE FROM AN AUTOMATED GAUGE LOCATED AT INDIANA HARBOR STATION (80-5). DEPTHS ARE MEASURED USING AN R2SONIC 2024 MULTIBEAM SONAR.
3. THE INFORMATION DEPICTED ON THIS MAP REPRESENTS THE RESULTS OF SURVEYS MADE ON APRIL 18, 2015 AND CAN ONLY BE CONSIDERED AS INDICATING THE GENERAL CONDITIONS PRESENT AT THE TIME.
4. HORIZONTAL POSITIONING IS DETERMINED USING THE DIFFERENTIAL GLOBAL POSITIONING SYSTEM (DGPS). THE DIFFERENTIAL CORRECTIONS ARE PROVIDED BY U.S. COAST GUARD DIFFERENTIAL BROADCAST STATIONS. SIGNAL STRENGTH IS USED AS THE DETERMINING FACTOR IN DIFFERENTIAL SELECTION. THE DGPS RECEIVER IS MANUFACTURED APPLANIX MARINE POS/MV VER 4.0
5. GRID COORDINATES ARE BASED ON THE INDIANA STATE PLANE COORDINATE SYSTEM, TRANSVERSE MERCATOR PROJECTION, INDIANA WEST ZONE (1302), NORTH AMERICAN DATUM 1983 (NAD83). ALL COORDINATES SHOWN ARE IN U.S.SURVEY FEET.
6. UNLESS OTHERWISE NOTED PROJECT DEPTH IS 28.0' BELOW LOW WATER DATUM.

US Army Corps of Engineers
Chicago District

| Symbol | Description | Date | Approved |
|---|---|---|---|
| | | | |

U.S. ARMY ENGINEER DISTRICT
CORPS OF ENGINEERS
CHICAGO, ILLINOIS

Surveyed by: J. Wrobel
Drawn by: Sam Sipes
Checked by: Dustin Jones
Reviewed by:
Approved Recommended: Michael Sipp, Supervisor
Approved by: Michael Sipp, Supervisor
District Engineer: Stephen L. Sandhaus
Survey Dates: April 18, 2015
Design file name:
Drawing code:
File name:
Plot date: 6-3-15
Plot scale: 1"=100'

CHICAGO DISTRICT
FEDERAL NAVIGATION CHANNEL
INDIANA HARBOR

INDIANA HARBOR
FY15 CONDITION SURVEY

Sheet reference number:
IND-4
Sheet 04 of 11

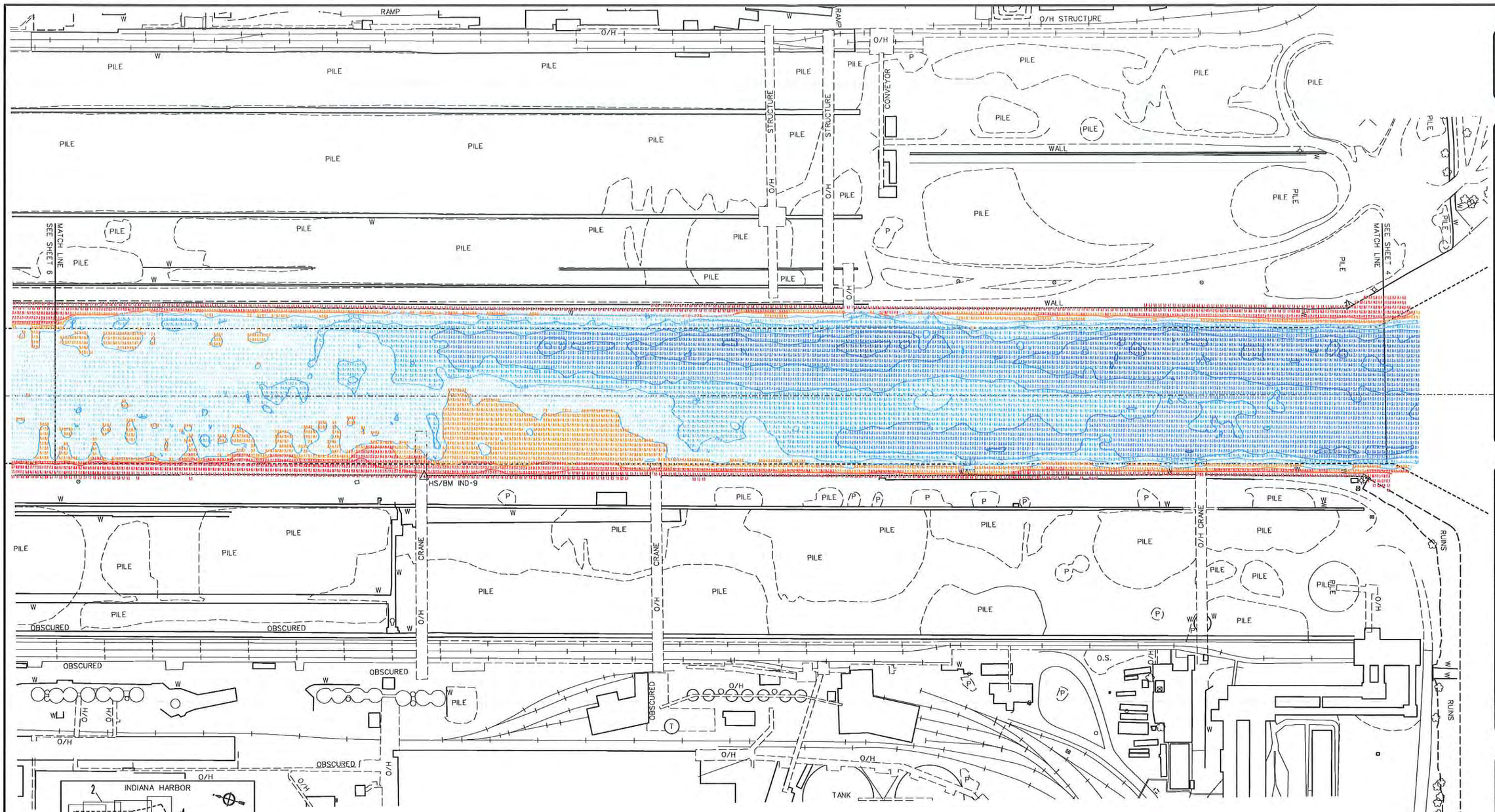


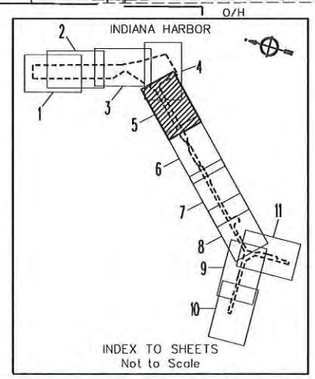


## NOTES

1. THE SOUNDINGS INDICATED HEREON REPRESENT THE MINIMUM DEPTH FOUND IN THE 10 FOOT BY 10 FOOT AREA CENTERED AROUND THE TEXT. MINIMUM DEPTH DATA IS PRODUCED FOR STRIKE/SHOAL REMOVAL OPERATIONS AND NOTICES TO NAVIGATION INTERESTS.
2. ELEVATIONS AND SOUNDING DEPTHS ARE REFERRED TO INTERNATIONAL GREAT LAKES DATUM 1985 (IGLD 85). LOW WATER DATUM ZERO IS 577.5 FEET ABOVE MEAN WATER LEVEL AT POINT RIMOUSKI QUEBEC. WATER LEVEL READINGS ARE FROM AN AUTOMATED GAUGE LOCATED AT THE DICKEY RD. BRIDGE. DEPTHS ARE MEASURED USING AN R2SONIC 2024 MULTIBEAM SONAR.
3. THE INFORMATION DEPICTED ON THIS MAP REPRESENTS THE RESULTS OF SURVEYS MADE ON APRIL 18, 2015 AND CAN ONLY BE CONSIDERED AS INDICATING THE GENERAL CONDITIONS PRESENT AT THE TIME.
4. HORIZONTAL POSITIONING IS DETERMINED USING THE DIFFERENTIAL GLOBAL POSITIONING SYSTEM (DGPS). THE DIFFERENTIAL CORRECTIONS ARE PROVIDED BY U.S. COAST GUARD DIFFERENTIAL BROADCAST STATIONS. SIGNAL STRENGTH IS USED AS THE DETERMINING FACTOR IN DIFFERENTIAL SELECTION. THE DGPS RECEIVER IS MANUFACTURED APPLANIX MARINE POS/MV VER 4.0
5. GRID COORDINATES ARE BASED ON THE INDIANA STATE PLANE COORDINATE SYSTEM, TRANSVERSE MERCATOR PROJECTION, INDIANA WEST ZONE (1302), NORTH AMERICAN DATUM 1983 (NAD83). ALL COORDINATES SHOWN ARE IN U.S.SURVEY FEET.
6. UNLESS OTHERWISE NOTED PROJECT DEPTH IS 27.0' BELOW LOW WATER DATUM.

0.0'
23.0'
25.0'
27.0'
29.0'
31.0'
33.0'
35.0'
50.0'

100' 50' 0 100' 200'
SCALE: 1"=100'

US Army Corps of Engineers
Chicago District

| Symbol | Description | Date | Appr. | Symbol | Description | Date | Appr. |
|---|---|---|---|---|---|---|---|

U.S. ARMY ENGINEER DISTRICT
CORPS OF ENGINEERS
CHICAGO, ILLINOIS

Surveyed by: J.P. Mrzosek
Drn by: Dan Wu
Chd by:
Design file name:
Drawing code:
File name:
Plot date: 6-13-15
Plot scale: 1"=100'
Rev.

Recommended by:
Approved by:
DISTRICT ENGINEER

CHICAGO DISTRICT
FEDERAL NAVIGATION CHANNEL
INDIANA HARBOR

INDIANA HARBOR
FY 15 CONDITION SURVEY

Sheet reference number:
IND-5
Sheet 05 of 11

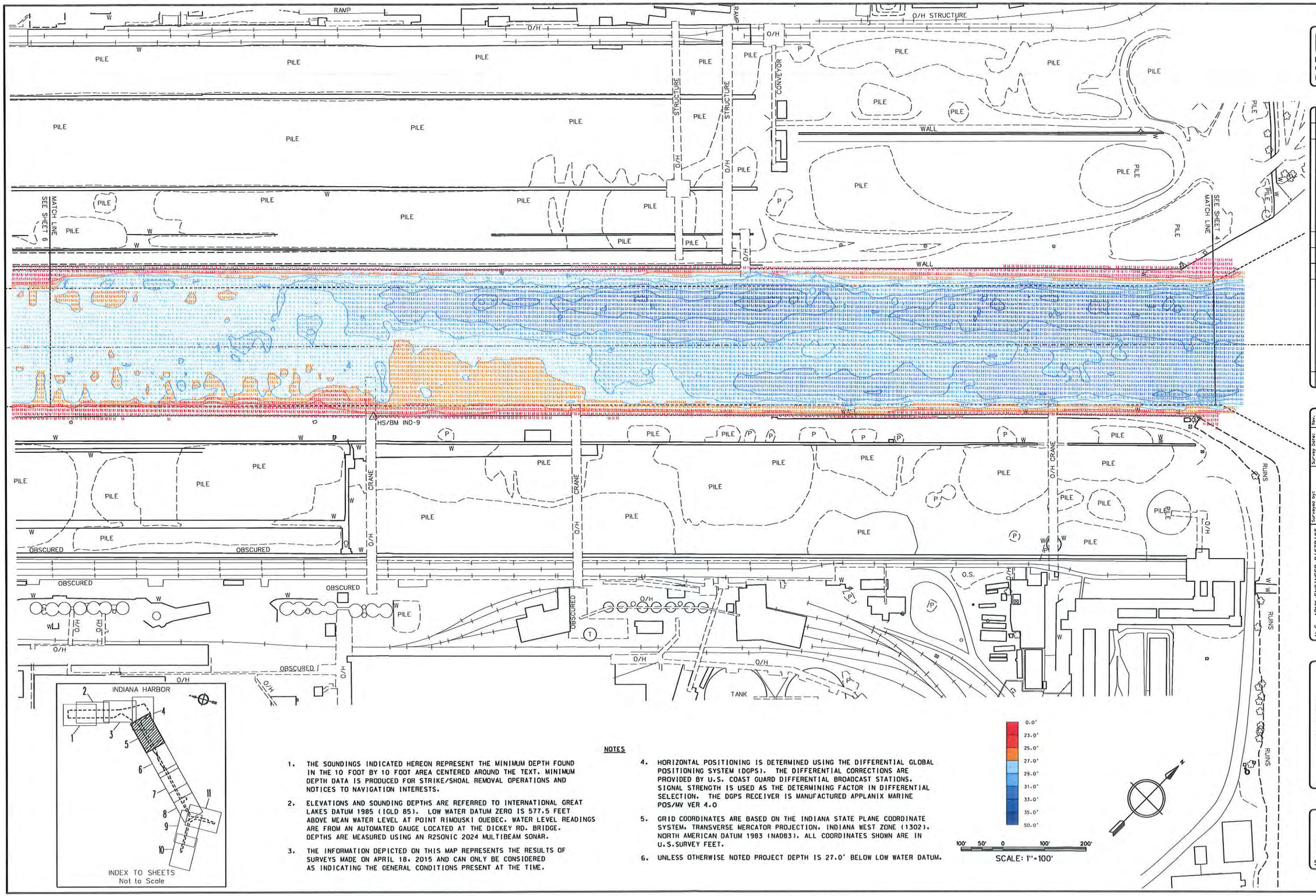


**NOTES**

1. THE SOUNDINGS INDICATED HEREON REPRESENT THE MINIMUM DEPTH FOUND IN THE 10 FOOT BY 10 FOOT AREA CENTERED AROUND THE TEXT. MINIMUM DEPTH DATA IS PRODUCED FOR STRIKE/SHOAL REMOVAL OPERATIONS AND NOTICES TO NAVIGATION INTERESTS.
2. ELEVATIONS AND SOUNDING DEPTHS ARE REFERRED TO INTERNATIONAL GREAT LAKES DATUM 1985 (IGLD 85). LOW WATER DATUM ZERO IS 577.5 FEET ABOVE MEAN WATER LEVEL AT POINT RIMOUSKI QUEBEC. WATER LEVEL READINGS ARE FROM AN AUTOMATED GAUGE LOCATED AT THE DICKEY RD. BRIDGE. DEPTHS ARE MEASURED USING AN R2SONIC 2024 MULTIBEAM SONAR.
3. THE INFORMATION DEPICTED ON THIS MAP REPRESENTS THE RESULTS OF SURVEYS MADE ON APRIL 18, 2015 AND CAN ONLY BE CONSIDERED AS INDICATING THE GENERAL CONDITIONS PRESENT AT THE TIME.
4. HORIZONTAL POSITIONING IS DETERMINED USING THE DIFFERENTIAL GLOBAL POSITIONING SYSTEM (DGPS). THE DIFFERENTIAL CORRECTIONS ARE PROVIDED BY U.S. COAST GUARD DIFFERENTIAL BROADCAST STATIONS. SIGNAL STRENGTH IS USED AS THE DETERMINING FACTOR IN DIFFERENTIAL SELECTION. THE DGPS RECEIVER IS MANUFACTURED APPLANIX MARINE POS/MV VER 4.0
5. GRID COORDINATES ARE BASED ON THE INDIANA STATE PLANE COORDINATE SYSTEM, TRANSVERSE MERCATOR PROJECTION, INDIANA WEST ZONE (1302), NORTH AMERICAN DATUM 1983 (NAD83). ALL COORDINATES SHOWN ARE IN U.S.SURVEY FEET.
6. UNLESS OTHERWISE NOTED PROJECT DEPTH IS 27.0' BELOW LOW WATER DATUM.

US Army Corps of Engineers
Chicago District

| Symbol | Description | Date | Appr. |
|---|---|---|---|
| | | | |

| Symbol | Description | Date | Appr. |
|---|---|---|---|
| | | | |

U.S. ARMY ENGINEER DISTRICT
CORPS OF ENGINEERS
CHICAGO, ILLINOIS

Surveyed by: J. Wrobek
Drawn by: Sam Bye
Checked by:
Drawing code:
Design file name:
Rev.
Survey Date: April 18, 2015
Plot scale: 1"=100'

Approval Recommended by: Chief, Eng. Mgmt.
Reviewed by:
Approved by: Chief, Eng. Div.
Submitted by:
Chief, Hydrographic Surveys
Chief, Cost Engineering

FEDERAL NAVIGATION PROJECT
INDIANA HARBOR

INDIANA HARBOR
FY 15 CONDITION SURVEY

Sheet reference number:
IND-5
Sheet 05 of 11

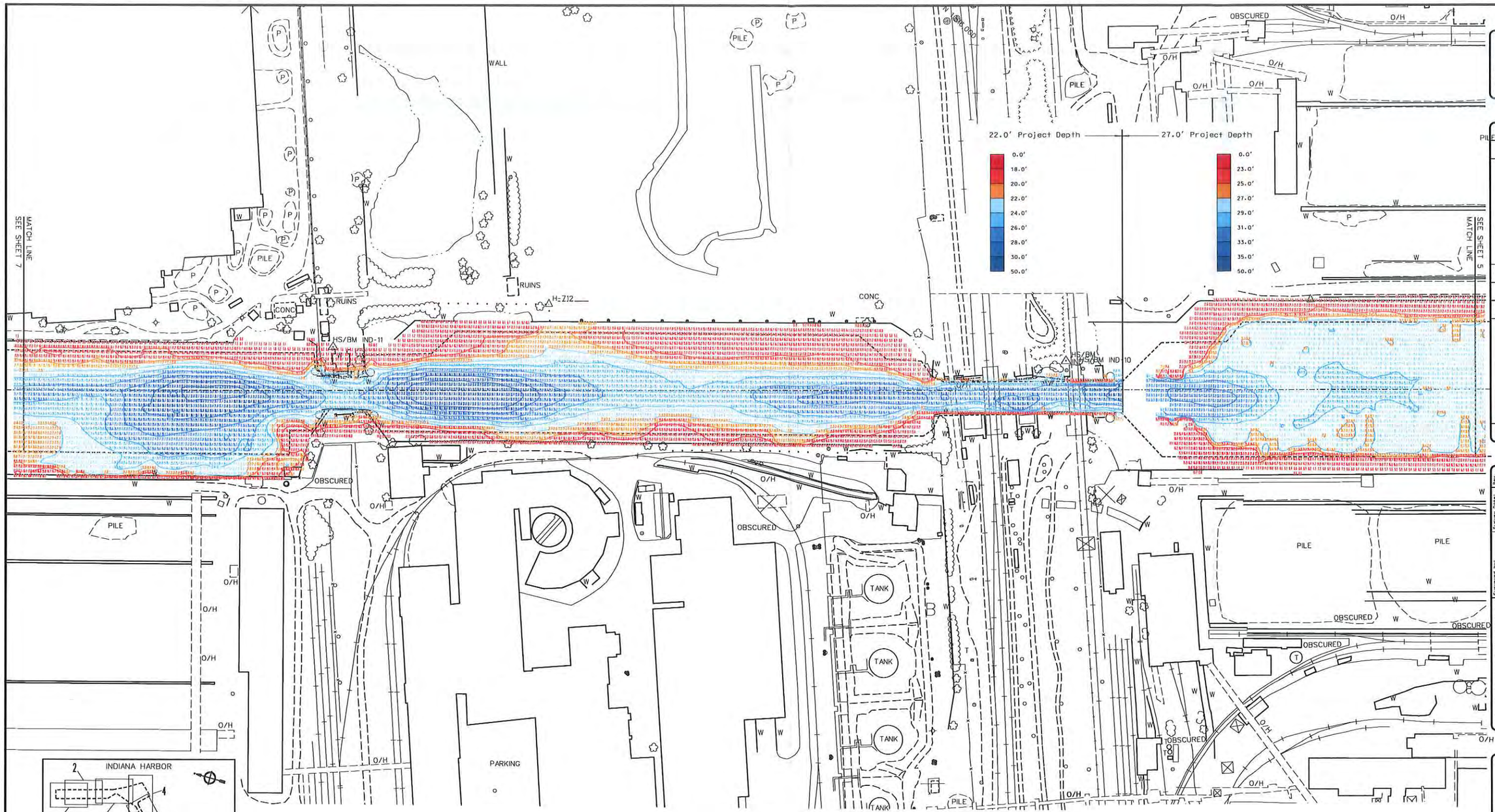


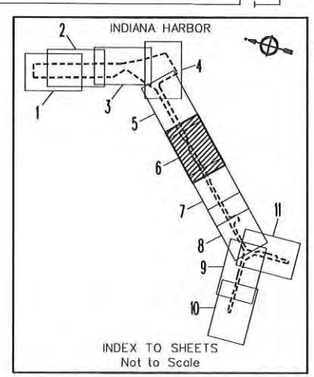


## NOTES

1. THE SOUNDINGS INDICATED HEREON REPRESENT THE MINIMUM DEPTH FOUND IN THE 10 FOOT BY 10 FOOT AREA CENTERED AROUND THE TEXT. MINIMUM DEPTH DATA IS PRODUCED FOR STRIKE/SHOAL REMOVAL OPERATIONS AND NOTICES TO NAVIGATION INTERESTS.
2. ELEVATIONS AND SOUNDING DEPTHS ARE REFERRED TO INTERNATIONAL GREAT LAKES DATUM 1985 (IGLD 85). LOW WATER DATUM ZERO IS 577.5 FEET ABOVE MEAN WATER LEVEL AT POINT RIMOUSKI QUEBEC. WATER LEVEL READINGS ARE FROM AN AUTOMATED GAUGE LOCATED AT THE DICKEY RD. BRIDGE. DEPTHS ARE MEASURED USING AN R2SONIC 2024 MULTIBEAM SONAR.
3. THE INFORMATION DEPICTED ON THIS MAP REPRESENTS THE RESULTS OF SURVEYS MADE ON APRIL 28, 2015 AND CAN ONLY BE CONSIDERED AS INDICATING THE GENERAL CONDITIONS PRESENT AT THE TIME.
4. HORIZONTAL POSITIONING IS DETERMINED USING THE DIFFERENTIAL GLOBAL POSITIONING SYSTEM (DGPS). THE DIFFERENTIAL CORRECTIONS ARE PROVIDED BY U.S. COAST GUARD DIFFERENTIAL BROADCAST STATIONS. SIGNAL STRENGTH IS USED AS THE DETERMINING FACTOR IN DIFFERENTIAL SELECTION. THE DGPS RECEIVER IS MANUFACTURED APPLANIX MARINE POS/MV VER 4.0
5. GRID COORDINATES ARE BASED ON THE INDIANA STATE PLANE COORDINATE SYSTEM, TRANSVERSE MERCATOR PROJECTION, INDIANA WEST ZONE (1302), NORTH AMERICAN DATUM 1983 (NAD83). ALL COORDINATES SHOWN ARE IN U.S.SURVEY FEET.
6. UNLESS OTHERWISE NOTED PROJECT DEPTH IS 22.0' BELOW LOW WATER DATUM.

100' 50' 0 100' 200'
SCALE: 1"=100'

US Army Corps of Engineers
Chicago District

| Symbol | Description | Date Assoc. | Symbol | Description | Date Assoc. |
|---|---|---|---|---|---|
| | | | | | |

U.S. ARMY ENGINEER DISTRICT
CORPS OF ENGINEERS
CHICAGO, ILLINOIS

Surveyed by: J. Brzak
Date: Apr. 28, 2015
Dwg by: J.R. Ja
Date: 6-13-15
Drawing code:
File name:
Plot date: 6-13-15
Plot scale: 1"=100'
Approval Recommended by: Chief, Eng. Geol. Branch
Approved by: Chief, Eng. Geol. Section
Submitted by: Chief, Sub Section
Approved by: District Engineer

CHICAGO DISTRICT
FEDERAL NAVIGATION CHANNEL
INDIANA HARBOR

# INDIANA HARBOR CANAL
# FY-15 CONDITION SURVEY

Sheet reference number:
IND-6
Sheet 06 of 11

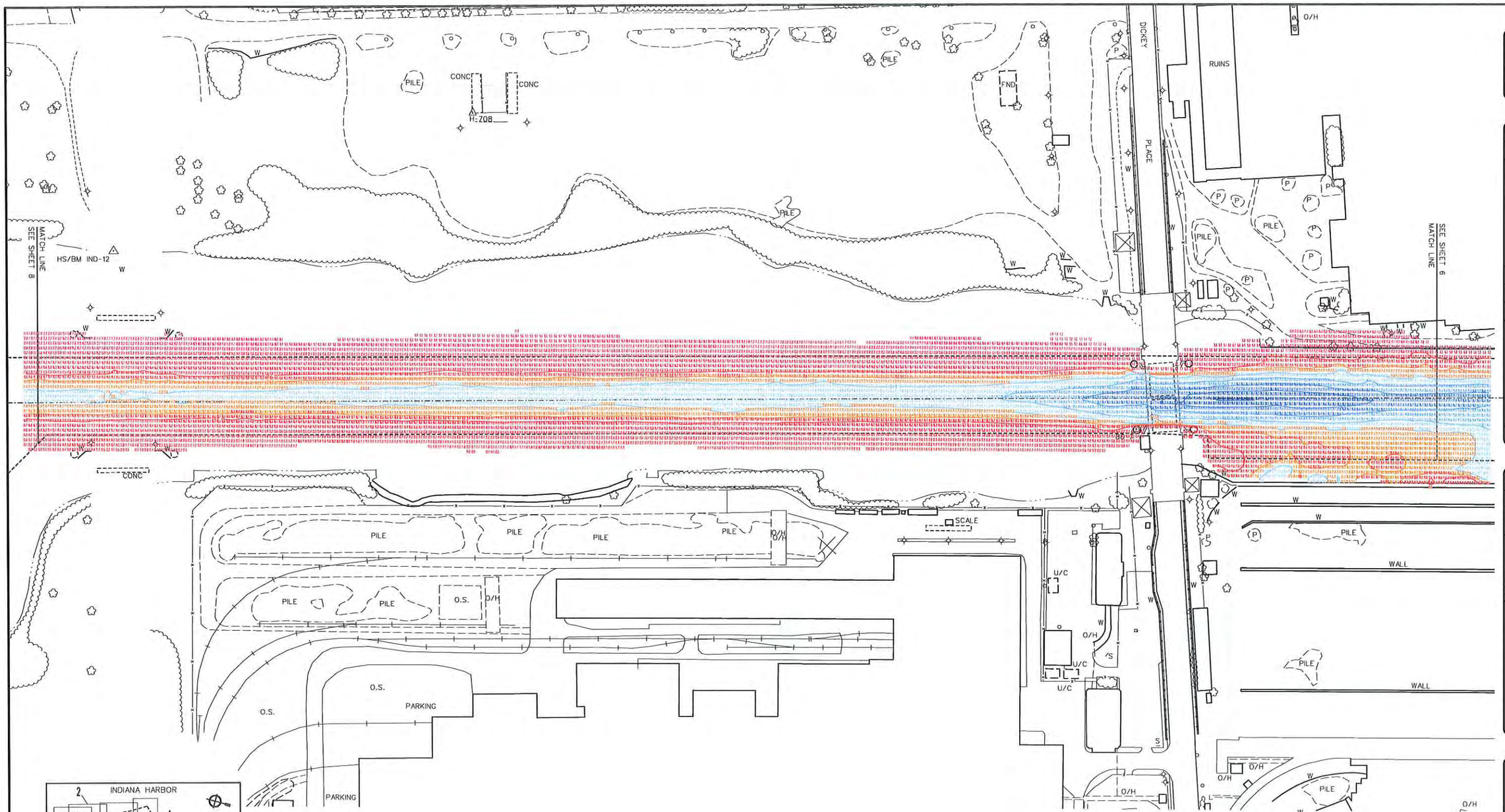


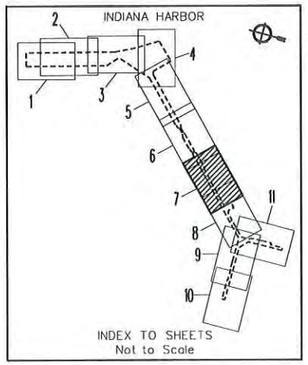


## NOTES

1. THE SOUNDINGS INDICATED HEREON REPRESENT THE MINIMUM DEPTH FOUND IN THE 10 FOOT BY 10 FOOT AREA CENTERED AROUND THE TEXT. MINIMUM DEPTH DATA IS PRODUCED FOR STRIKE/SHOAL REMOVAL OPERATIONS AND NOTICES TO NAVIGATION INTERESTS.
2. ELEVATIONS AND SOUNDING DEPTHS ARE REFERRED TO INTERNATIONAL GREAT LAKES DATUM 1985 (IGLD 85). LOW WATER DATUM ZERO IS 577.5 FEET ABOVE MEAN WATER LEVEL AT POINT RIMOUSKI QUEBEC. WATER LEVEL READINGS ARE FROM AN AUTOMATED GAUGE LOCATED AT THE DICKEY RD. BRIDGE. DEPTHS ARE MEASURED USING AN R2SONIC 2024 MULTIBEAM SONAR.
3. THE INFORMATION DEPICTED ON THIS MAP REPRESENTS THE RESULTS OF SURVEYS MADE ON APRIL 28, 2015 AND CAN ONLY BE CONSIDERED AS INDICATING THE GENERAL CONDITIONS PRESENT AT THE TIME.
4. HORIZONTAL POSITIONING IS DETERMINED USING THE DIFFERENTIAL GLOBAL POSITIONING SYSTEM (DGPS). THE DIFFERENTIAL CORRECTIONS ARE PROVIDED BY U.S. COAST GUARD DIFFERENTIAL BROADCAST STATIONS. SIGNAL STRENGTH IS USED AS THE DETERMINING FACTOR IN DIFFERENTIAL SELECTION. THE DGPS RECEIVER IS MANUFACTURED APPLANIX MARINE POS/MV VER 4.0
5. GRID COORDINATES ARE BASED ON THE INDIANA STATE PLANE COORDINATE SYSTEM, TRANSVERSE MERCATOR PROJECTION, INDIANA WEST ZONE (1302), NORTH AMERICAN DATUM 1983 (NAD83). ALL COORDINATES SHOWN ARE IN U.S.SURVEY FEET.
6. UNLESS OTHERWISE NOTED PROJECT DEPTH IS 22.0' BELOW LOW WATER DATUM.

US Army Corps of Engineers
Chicago District

| Symbol | Description | Date | Approved |
|---|---|---|---|
| | | | |

U.S. ARMY ENGINEER DISTRICT
CORPS OF ENGINEERS
CHICAGO, ILLINOIS

Surveyed by: J. Wrobek
Drawn by: J. Wrobek
Checked by:
Approved: Recommended:
Chief, Eng. Spec. Branch
Approved by:
District Engineer
Survey Date: April 28, 2015
Design file name:
Drawing code:
Submitted by:
Chief, Eng. Support
Chief, Spec. Section
File name:
Plot date: 6-3-15
Plot scale: 1"=100'

CHICAGO DISTRICT
FEDERAL NAVIGATION CHANNEL
INDIANA HARBOR

INDIANA HARBOR CANAL
FY-15 CONDITION SURVEY

Sheet reference number:
IND-7
Sheet 07 of 11

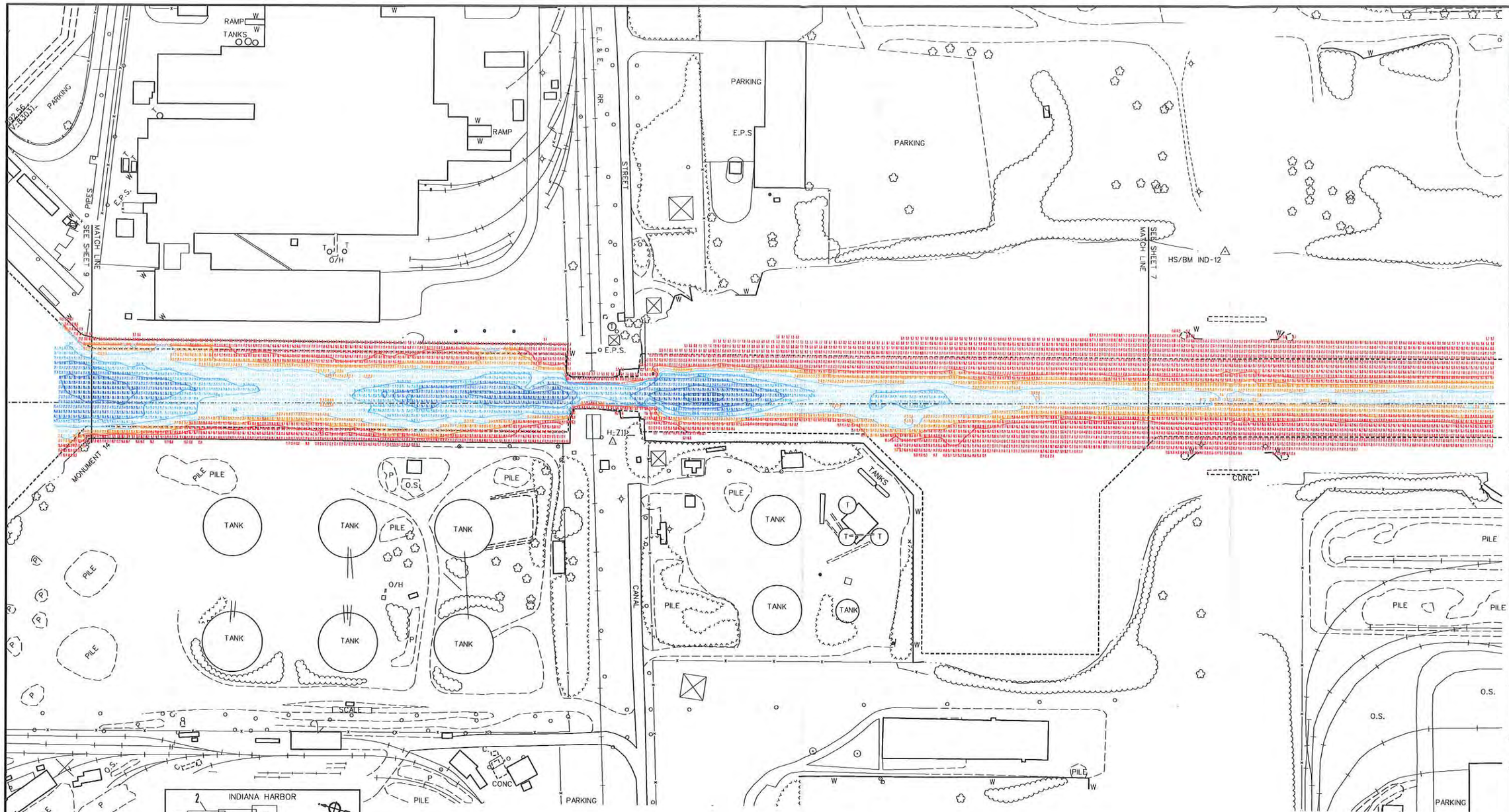


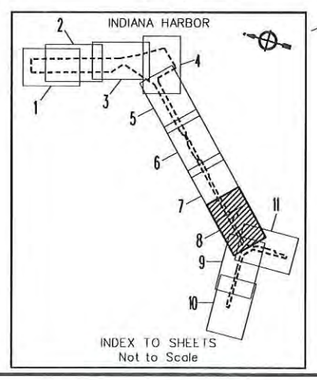


INDEX TO SHEETS
Not to Scale

## NOTES

1. THE SOUNDINGS INDICATED HEREON REPRESENT THE MINIMUM DEPTH FOUND IN THE 10 FOOT BY 10 FOOT AREA CENTERED AROUND THE TEXT. MINIMUM DEPTH DATA IS PRODUCED FOR STRIKE/SHOAL REMOVAL OPERATIONS AND NOTICES TO NAVIGATION INTERESTS.
2. ELEVATIONS AND SOUNDING DEPTHS ARE REFERRED TO INTERNATIONAL GREAT LAKES DATUM 1985 (IGLD 85). LOW WATER DATUM ZERO IS 577.5 FEET ABOVE MEAN WATER LEVEL AT POINT RIMOUSKI QUEBEC. WATER LEVEL READINGS ARE FROM AN AUTOMATED GAUGE LOCATED AT THE DICKEY RD. BRIDGE. DEPTHS ARE MEASURED USING AN R2SONIC 2024 MULTIBEAM SONAR.
3. THE INFORMATION DEPICTED ON THIS MAP REPRESENTS THE RESULTS OF SURVEYS MADE ON APRIL 28, 2015 AND CAN ONLY BE CONSIDERED AS INDICATING THE GENERAL CONDITIONS PRESENT AT THE TIME.
4. HORIZONTAL POSITIONING IS DETERMINED USING THE DIFFERENTIAL GLOBAL POSITIONING SYSTEM (DGPS). THE DIFFERENTIAL CORRECTIONS ARE PROVIDED BY U.S. COAST GUARD DIFFERENTIAL BROADCAST STATIONS. SIGNAL STRENGTH IS USED AS THE DETERMINING FACTOR IN DIFFERENTIAL SELECTION. THE DGPS RECEIVER IS MANUFACTURED APPLANIX MARINE POS/MV VER 4.0
5. GRID COORDINATES ARE BASED ON THE INDIANA STATE PLANE COORDINATE SYSTEM, TRANSVERSE MERCATOR PROJECTION, INDIANA WEST ZONE (1302), NORTH AMERICAN DATUM 1983 (NAD83). ALL COORDINATES SHOWN ARE IN U.S.SURVEY FEET.
6. UNLESS OTHERWISE NOTED PROJECT DEPTH IS 22.0' BELOW LOW WATER DATUM.

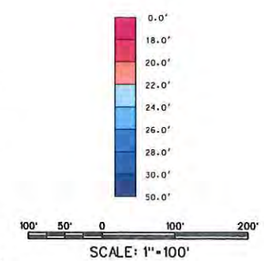


SCALE: 1"=100'

US Army Corps of Engineers
Chicago District

| Symbol | Description | Date | Appr. | Symbol | Description | Date | Appr. |
|---|---|---|---|---|---|---|---|

U.S. ARMY ENGINEER DISTRICT
CORPS OF ENGINEERS
CHICAGO, ILLINOIS

Approval Recommended:
Area Eng. Soo Office
Approved by:
District Engineer:

Surveyed by: J. Mrazek
Dwn by: J.S.M.
Ckd by:
Reviewed by:
Chief, Fac. Mgmt.
Submitted by:
Chief, SMM Section

Survey Date: April 28, 2015
Design file name:
Drawing code:
File name: 6-13-15
Plot date: 1"=100'
Plot scale:

Rev.

CHICAGO DISTRICT
FEDERAL NAVIGATION CHANNEL
INDIANA HARBOR

INDIAN HARBOR CANAL
FY-15 CONDITION SURVEY

Sheet reference number:
IND-8
Sheet 08 of 11

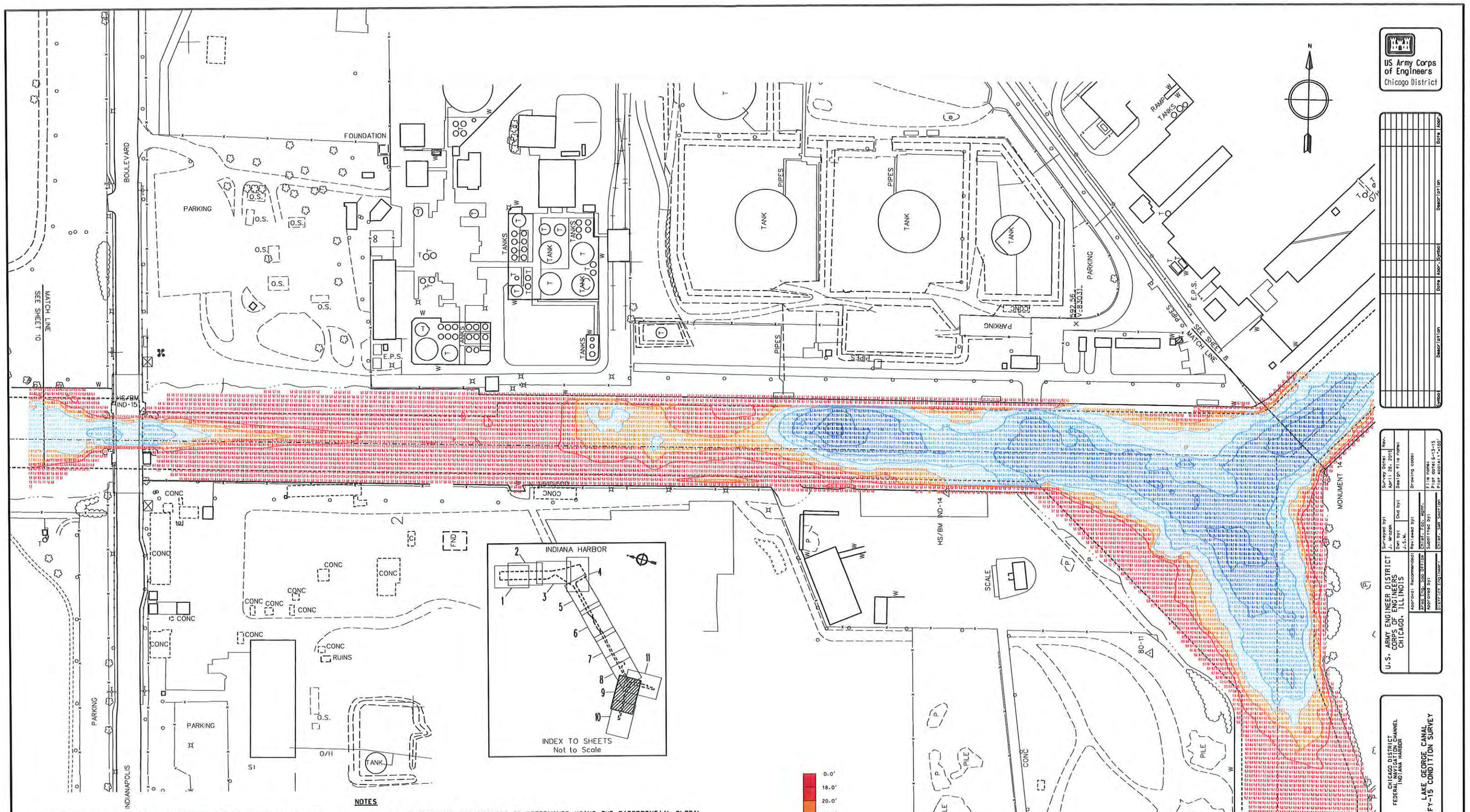


US Army Corps of Engineers
Chicago District

| Symbol | Description | Date | Approved |
|---|---|---|---|

U.S. ARMY ENGINEER DISTRICT
CORPS OF ENGINEERS
CHICAGO, ILLINOIS

Surveyed by: J. Wrasek
Survey Date: April 28, 2015
Drawn by: Dwn by:
Dwg Date:
Design File name:
Drawing code:
Approved: Recommended:
Approved by:
Submitted by:
Submitted by:
Date: Sign Name
Date: Sign Name
DISTRICT ENGINEER
File name:
Plot date: 1"=1'-0"
Plot scale: 1"=100'

CHICAGO DISTRICT
FEDERAL NAVIGATION CHANNEL
INDIANA HARBOR

# LAKE GEORGE CANAL
## FY-15 CONDITION SURVEY

Sheet reference number:
IND-9
Sheet 09 of 11

**NOTES**

1. THE SOUNDINGS INDICATED HEREON REPRESENT THE MINIMUM DEPTH FOUND IN THE 10 FOOT BY 10 FOOT AREA CENTERED AROUND THE TEXT. MINIMUM DEPTH DATA IS PRODUCED FOR STRIKE/SHOAL REMOVAL OPERATIONS AND NOTICES TO NAVIGATION INTERESTS.
2. ELEVATIONS AND SOUNDING DEPTHS ARE REFERRED TO INTERNATIONAL GREAT LAKES DATUM 1985 (IGLD 85). LOW WATER DATUM ZERO IS 577.5 FEET ABOVE MEAN WATER LEVEL AT POINT RIMOUSKI QUEBEC. WATER LEVEL READINGS ARE FROM AN AUTOMATED GAUGE LOCATED AT THE DICKEY RD. BRIDGE. DEPTHS ARE MEASURED USING AN R2SONIC 2024 MULTIBEAM SONAR.
3. THE INFORMATION DEPICTED ON THIS MAP REPRESENTS THE RESULTS OF SURVEYS MADE ON APRIL 28, 2015 AND CAN ONLY BE CONSIDERED AS INDICATING THE GENERAL CONDITIONS PRESENT AT THE TIME.
4. HORIZONTAL POSITIONING IS DETERMINED USING THE DIFFERENTIAL GLOBAL POSITIONING SYSTEM (DGPS). THE DIFFERENTIAL CORRECTIONS ARE PROVIDED BY U.S. COAST GUARD DIFFERENTIAL BROADCAST STATIONS. SIGNAL STRENGTH IS USED AS THE DETERMINING FACTOR IN DIFFERENTIAL SELECTION. THE DGPS RECEIVER IS MANUFACTURED APPLANIX MARINE POS/MV VER 4.0
5. GRID COORDINATES ARE BASED ON THE INDIANA STATE PLANE COORDINATE SYSTEM, TRANSVERSE MERCATOR PROJECTION, INDIANA WEST ZONE (1302), NORTH AMERICAN DATUM 1983 (NAD83). ALL COORDINATES SHOWN ARE IN U.S.SURVEY FEET.
6. UNLESS OTHERWISE NOTED PROJECT DEPTH IS 22.0' BELOW LOW WATER DATUM.

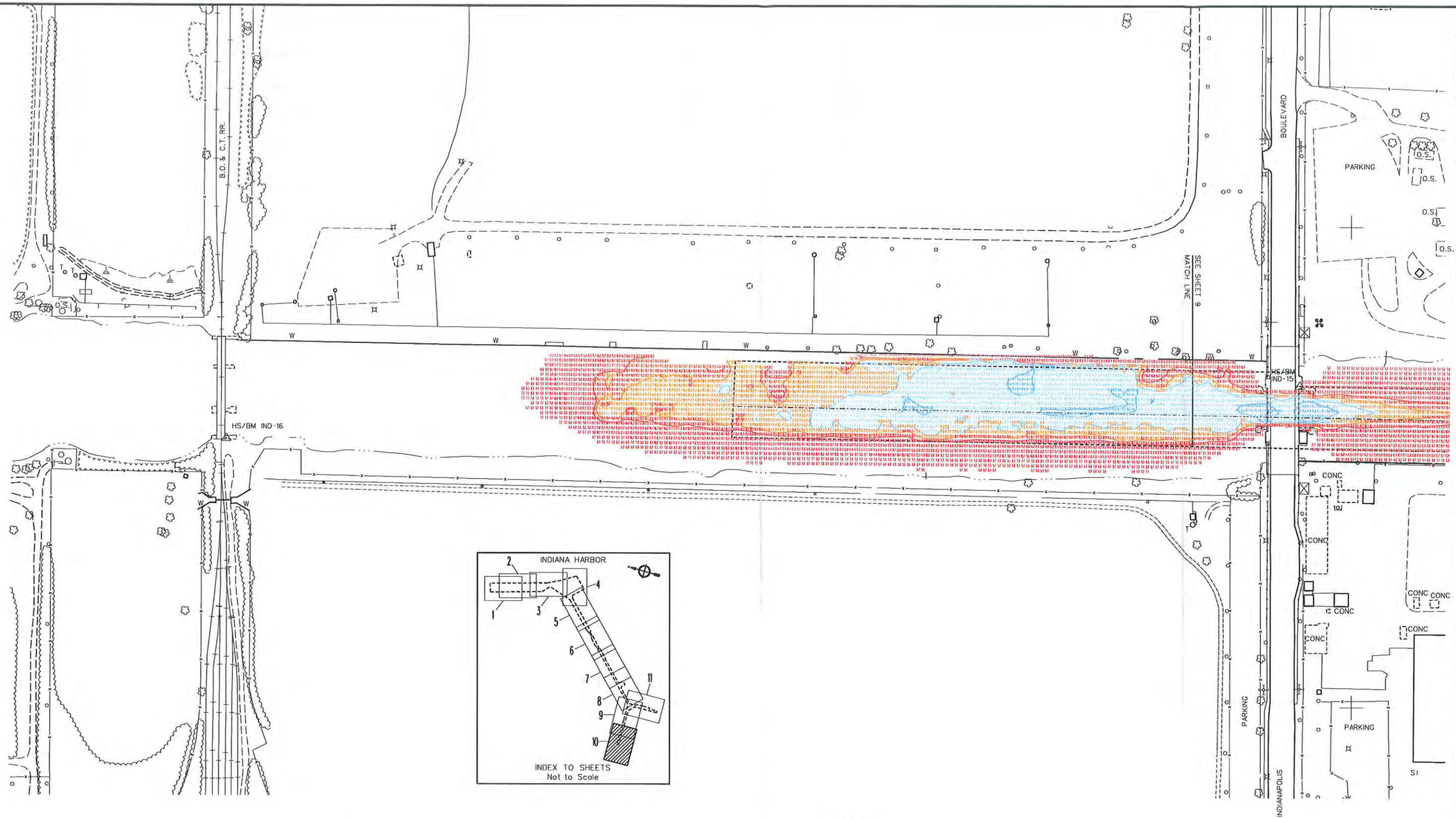


NOTES

1. THE SOUNDINGS INDICATED HEREON REPRESENT THE MINIMUM DEPTH FOUND IN THE 10 FOOT BY 10 FOOT AREA CENTERED AROUND THE TEXT. MINIMUM DEPTH DATA IS PRODUCED FOR STRIKE/SHOAL REMOVAL OPERATIONS AND NOTICES TO NAVIGATION INTERESTS.
2. ELEVATIONS AND SOUNDING DEPTHS ARE REFERRED TO INTERNATIONAL GREAT LAKES DATUM 1985 (IGLD 85). LOW WATER DATUM ZERO IS 577.5 FEET ABOVE MEAN WATER LEVEL AT POINT RIMOUSKI QUEBEC. WATER LEVEL READINGS ARE FROM AN AUTOMATED GAUGE LOCATED AT THE DICKEY RD. BRIDGE. DEPTHS ARE MEASURED USING AN R2SONIC 2024 MULTIBEAM SONAR.
3. THE INFORMATION DEPICTED ON THIS MAP REPRESENTS THE RESULTS OF SURVEYS MADE ON APRIL 28, 2015 AND CAN ONLY BE CONSIDERED AS INDICATING THE GENERAL CONDITIONS PRESENT AT THE TIME.
4. HORIZONTAL POSITIONING IS DETERMINED USING THE DIFFERENTIAL GLOBAL POSITIONING SYSTEM (DGPS). THE DIFFERENTIAL CORRECTIONS ARE PROVIDED BY U.S. COAST GUARD DIFFERENTIAL BROADCAST STATIONS. SIGNAL STRENGTH IS USED AS THE DETERMINING FACTOR IN DIFFERENTIAL SELECTION. THE DGPS RECEIVER IS MANUFACTURED APPLANIX MARINE POS/MV VER 4.0
5. GRID COORDINATES ARE BASED ON THE INDIANA STATE PLANE COORDINATE SYSTEM, TRANSVERSE MERCATOR PROJECTION, INDIANA WEST ZONE (1302), NORTH AMERICAN DATUM 1983 (NAD83). ALL COORDINATES SHOWN ARE IN U.S.SURVEY FEET.
6. UNLESS OTHERWISE NOTED PROJECT DEPTH IS 22.0' BELOW LOW WATER DATUM.

US Army Corps of Engineers
Chicago District

| Symbol | Description | Date | Appr. Symbol | Description | Date | Appr. |
|---|---|---|---|---|---|---|

Surveyed by: J. Lawson
Survey date: 2015
Dwn by: J.S.M.
Chkd by:
Design file name:
Drawing code:
Approval Recommended by:
Rev/Issued by:
Approved by:
Submitted by:
File name: IND-10.dgn
Plot scale: 1"=100'
Army Eng. Soc Officer
Chief, Eng. Mgmt.
District Engineer
Chief, Sec. Section

U.S. ARMY ENGINEER DISTRICT
CORPS OF ENGINEERS
CHICAGO, ILLINOIS

CHICAGO DISTRICT
FEDERAL NAVIGATION CHANNEL
INDIANA HARBOR

LAKE GEORGE CANAL
FY-15 CONDITION SURVEY

Sheet reference number:
IND-10
Sheet 10 of 11

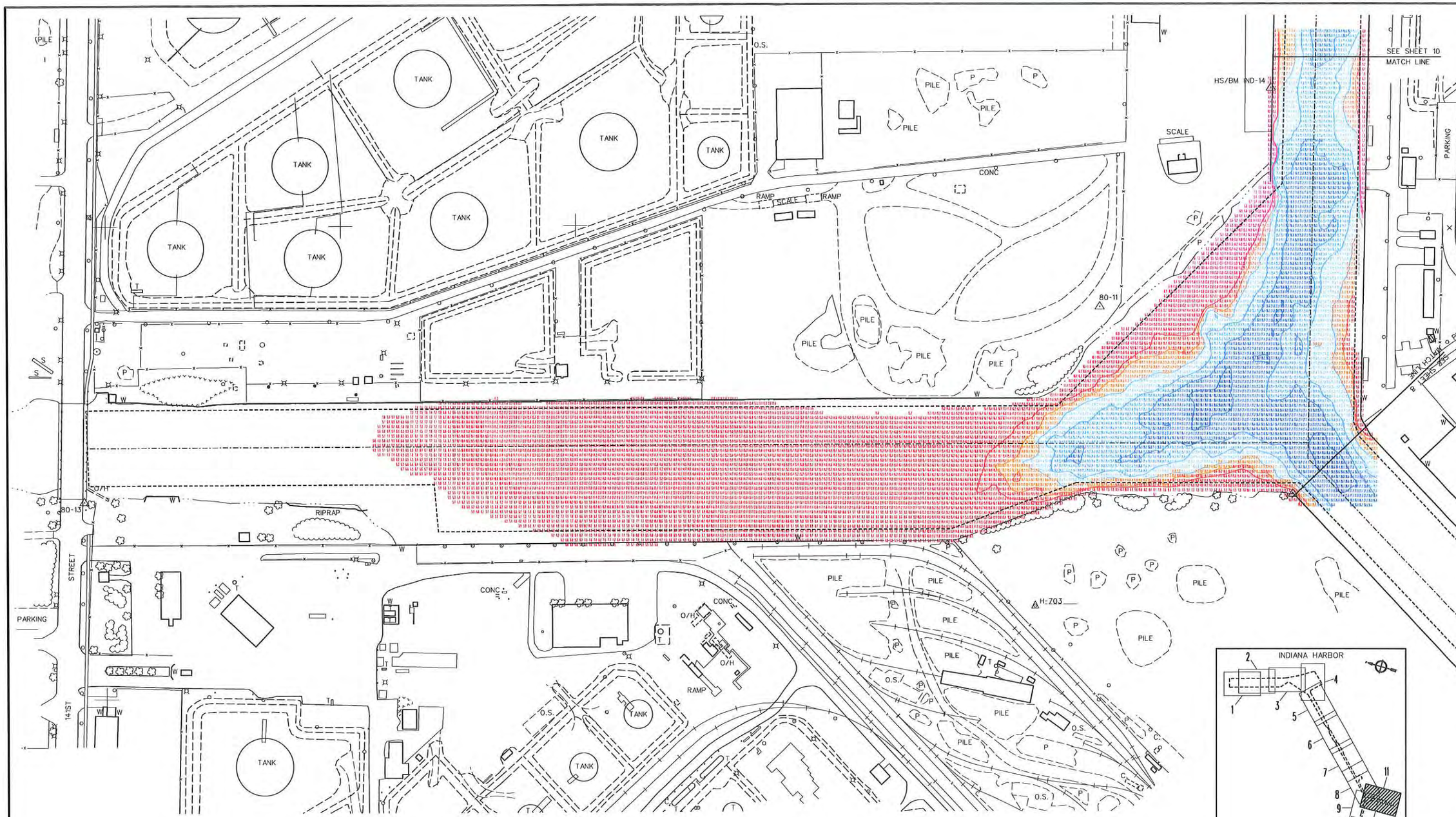


US Army Corps of Engineers
Chicago District

| Symbol | Description | Date Appr. | Symbol | Description | Date Appr. |
|---|---|---|---|---|---|

U.S. ARMY ENGINEER DISTRICT
CORPS OF ENGINEERS
CHICAGO, ILLINOIS

Surveyed by: J. Wrobek
Survey Dates: April 28, 2015
Rev.
Dwn by: J. Wrobek
Dsd by:
Design File name:
Rev. Made by:
Drawing code:
Approved Recommended: Chief, Eng. Geo. Office
Signature Date:
File name:
Approved by: District Engineer
Signature Date:
File name: IND-11
Plot date: 6-1-15
Plot scale: 1"=100'

CHICAGO DISTRICT
FEDERAL NAVIGATION CHANNEL
INDIANA HARBOR

CALUMET RIVER BRANCH
FY-15 CONDITION SURVEY

Sheet reference number:
IND-11
Sheet 11 of 11

## NOTES

1. THE SOUNDINGS INDICATED HEREON REPRESENT THE MINIMUM DEPTH FOUND IN THE 10 FOOT BY 10 FOOT AREA CENTERED AROUND THE TEXT. MINIMUM DEPTH DATA IS PRODUCED FOR STRIKE/SHOAL REMOVAL OPERATIONS AND NOTICES TO NAVIGATION INTERESTS.
2. ELEVATIONS AND SOUNDING DEPTHS ARE REFERRED TO INTERNATIONAL GREAT LAKES DATUM 1985 (IGLD 85). LOW WATER DATUM ZERO IS 577.5 FEET ABOVE MEAN WATER LEVEL AT POINT RIMOUSKI QUEBEC. WATER LEVEL READINGS ARE FROM AN AUTOMATED GAUGE LOCATED AT THE DICKEY RD. BRIDGE. DEPTHS ARE MEASURED USING AN R2SONIC 2024 MULTIBEAM SONAR.
3. THE INFORMATION DEPICTED ON THIS MAP REPRESENTS THE RESULTS OF SURVEYS MADE ON APRIL 28, 2015 AND CAN ONLY BE CONSIDERED AS INDICATING THE GENERAL CONDITIONS PRESENT AT THE TIME.
4. HORIZONTAL POSITIONING IS DETERMINED USING THE DIFFERENTIAL GLOBAL POSITIONING SYSTEM (DGPS). THE DIFFERENTIAL CORRECTIONS ARE PROVIDED BY U.S. COAST GUARD DIFFERENTIAL BROADCAST STATIONS. SIGNAL STRENGTH IS USED AS THE DETERMINING FACTOR IN DIFFERENTIAL SELECTION. THE DGPS RECEIVER IS MANUFACTURED APPLANIX MARINE POS/MV VER 4.0
5. GRID COORDINATES ARE BASED ON THE INDIANA STATE PLANE COORDINATE SYSTEM, TRANSVERSE MERCATOR PROJECTION, INDIANA WEST ZONE (1302), NORTH AMERICAN DATUM 1983 (NAD83). ALL COORDINATES SHOWN ARE IN U.S.SURVEY FEET.
6. UNLESS OTHERWISE NOTED PROJECT DEPTH IS 22.0' BELOW LOW WATER DATUM.

0.0'
18.0'
20.0'
22.0'
24.0'
26.0'
28.0'
30.0'
50.0'

100' 50' 0 100' 200'
SCALE: 1"=100'