Indiana
Department of Local Government Finance

Committed to a fair and equitable property tax system for Hoosier taxpayers.

2011 Summer Assessor Conference

Cost Schedules for the 2012 Reassessment

Terry Knee, DLGF Field Supervisor

J. Wayne Moore, Ph.D.

September 1-2, 2011

Cost Schedules for the 2012 Reassessment

- Delivery schedule of the 2012 cost tables:
  - Appendix C: Draft was distributed in early May; Final revised release was July 1, 2011
  - Appendix G: Draft was distributed July 1, 2011; Final revised release was August 2011
- Why were new cost schedules needed?
  - 2002 cost schedules were based on 1999 costs
  - Construction costs have changed
  - Original Guidelines (Manual) was written 35 years ago
  - Construction methods, design, materials have changed
  - Cost model assumptions needed review & update

Cost Schedules for the 2012 Reassessment

- What goals were set for doing the update?
  - Minimize the cost
  - No change in data collection requirements
  - Retain existing format to minimize software impact
  - Develop an in-house annual update capacity if possible

Cost Schedules for the 2012 Reassessment

- Method selected was to do the work at DLGF
  - Best potential to control & minimize cost
  - Best potential for minimizing software impact
  - Best potential for developing annual cost update capacity
- What process was used?
  - 1st – Issue RFP to obtain the right to use cost publisher's data
  - 2nd – Issue RFP to obtain technical assistance & training
  - 3rd – Create a cost update project team
    - Barry Wood, Terry Knee, David Schwab, & Wayne Moore

Cost Schedules for the 2012 Reassessment

- If Indiana's assessment standard is "market-value-in-use", why are cost schedules needed?
  - Construction cost provides the foundation from which sales calibration analysis and adjustments begin
  - Cost of construction is understandable to most people
  - New research* on using parcel x-y location coordinates has found that accurate replacement cost new (RCN) is an important variable for improving model results in Geographic Attribute Weighted Regression, a technique that is yielding the best house price estimates to date

* Moore & Myers (2010) *Journal of Property Tax Assessment & Administration • Volume 6, Issue 3*

Cost Schedules for the 2012 Reassessment

- Exactly what is replacement cost new (RCN)?

  Definition: Replacement cost new (RCN) *is the cost, including material, labor, and overhead, that would be incurred in constructing an improvement having the same utility to its owner as a subject improvement, without necessarily reproducing exactly any particular characteristics of the subject* (IAAO 1997, p. 120).

- Fact: Building design, materials, and construction methods have undergone much change during the past few years
- Hence, a replacement structure will likely be different in design and materials from the original improvement

Cost Schedules for the 2012 Reassessment

What is a "Cost Model" and why is it needed?

- Building material and labor costs are tracked by specialized publishers for commercial use by insurance companies and the construction industry, as well as appraisers
- Contractors use the published cost data for creating ***detailed*** cost estimates from building plans
- Appraisers need a ***cost approach estimating model*** that gives the best trade-off between *accuracy* and *time invested*
- The ***same*** building material and labor cost data can give different estimating accuracy, depending upon the ***cost model used –*** this will be shown later with Craftsman data

Cost Schedules for the 2012 Reassessment

Examples of Cost Estimating Model Differences

(Moore: 1995 IAAO Conference Presentation, "Stratified Cost Approach", p 228)

	Cost Table Organization			Quality Adjustment	
Cost Manual	Styles	Floor Level	Size	Separate Table	Multiplier
A. Marshall & Swift Residential Cost Handbook	X		X	X	
B. Iowa & Illinois Manuals*	X		X		X
C. Missouri/Hunnicutt			X		X
D. Oregon Manual		X	X	X	
E. Indiana Manual		X	X		X

* Most other cost manuals published by mass appraisal firms use method B.

Figure 2. Traditional methods of Cost Manual Unit Comparisons

Cost Schedules for the 2012 Reassessment

Accurate Cost Model Assumptions Are Needed

- All "models" attempt to simulate the real world
  - Models require assumptions
  - A "typical" structure must be defined by RCN model assumptions
  - Building construction design and methods have changed
  - Most original cost approach model assumptions are not available
- Therefore, first step was to define assumptions

Cost Schedules for the 2012 Reassessment

What are the typical house floor sizes?

	Typical Indiana Residential Descriptive Statistics Report - Floor Size for C Grade Homes with Age < 10 yrs											
Total	1 Story				2 Story - 1st Floor				2 Story - 2nd Floor			
3979	C - 1	C	C + 1	C + 2	C - 1	C	C + 1	C + 2	C - 1	C	C + 1	C + 2
Count	217	405	393	277	611	904	873	299	611	904	873	299
Mean	1434	1499	1504	1643	1052	1010	1300	1239	1392	1232	1542	1314
Median	1410	1454	1432	1505	1024	968	1304	1176	1354	1204	1522	1272
Mode	1510	1252	1264	1264	974	654	1606	557	1191	517	2002	none
Min	911	824	915	1030	557	557	557	557	480	64	225	56
Max	2962	3158	2812	3325	1850	2035	2186	3047	2159	2339	2770	2288
Range	2051	2334	1897	2295	1293	1478	1629	2490	1679	2275	2545	2232
	Percentile				Percentile				Percentile			
99	2458	2670	2730	3056	1702	1750	2096	2260	2096	2039	2496	2272
95	1875	2080	2163	2469	1588	1600	1925	1911	1970	1935	2377	2032
90	1814	1912	1946	2287	1500	1506	1782	1648	1820	1787	2189	1911
85	1753	1796	1819	2137	1347	1364	1744	1585	1704	1681	2150	1810
80	1592	1722	1765	2050	1313	1322	1656	1547	1657	1598	2002	1693
75	1542	1691	1705	1955	1250	1249	1606	1473	1610	1518	2002	1600
70	1510	1632	1623	1809	1216	1208	1606	1424	1537	1407	1861	1566
65	1510	1577	1541	1700	1151	1147	1493	1347	1506	1354	1717	1488
60	1510	1522	1496	1620	1117	1064	1428	1300	1461	1303	1636	1404
55	1476	1505	1457	1549	1062	989	1347	1256	1405	1250	1602	1326
50	***1410***	***1454***	***1432***	***1505***	***1024***	***968***	***1304***	***1176***	***1354***	***1204***	***1522***	***1272***
45	1358	1423	1408	1458	974	927	1227	1140	1316	1190	1400	1224
40	1317	1371	1327	1419	940	864	1158	1081	1253	1142	1335	1195
35	1275	1323	1285	1386	876	812	1095	1039	1211	1088	1259	1140
30	1262	1278	1264	1327	851	767	1029	1022	1210	1020	1197	1092
25	1237	1252	1253	1264	825	706	974	1000	1191	951	1186	1020
20	1199	1230	1239	1264	806	663	927	968	1140	937	1126	961
15	1198	1207	1214	1240	746	654	860	918	1086	755	1080	926
10	1130	1183	1198	1212	706	654	805	816	1082	732	955	823
5	1066	1071	1170	1202	627	629	706	756	948	517	813	643
1	971	936	978	1096	557	557	557	557	669	504	374	280

Notice that 90% of 1-story sizes are in the range of 1000-2000 square feet

Cost Schedules for the 2012 Reassessment

Residential Model Assumptions

- Model assumptions formed from real world observation
- Benchmark house sizes to fit data and span Schedule A:

  100 400 600 800 1000 1200 1300 1400 1500 1600 1800 2400 3200 4000 5000
- From 2010 new house floor plans, we determined construction characteristics for each floor level:
  - Average perimeter linear feet at each benchmark house size
  - Average linear feet of interior walls at each benchmark house size
  - Number of single window equivalents at each benchmark house size
  - Number of exterior and interior doors at each benchmark house size
  - Average linear feet of attached garage common wall
  - Typical roof pitch for each house type:
    - One story, two story, part upper floor (½ & ¾ story), attic level

Cost Schedules for the 2012 Reassessment

- Residential cost model assumptions based upon an analysis of 269 modern floor plans:
  - 91 one story house plans including 13 from major Indianapolis home builders
  - 70 two story first floor plans including 16 from major Indianapolis home builders
  - 73 two story second floor plans including 16 from Indianapolis home builders
  - 35 half & three-quarter story upper level floor plans from the national house plan database

Cost Schedules for the 2012 Reassessment

Residential Cost Model Data Gathering

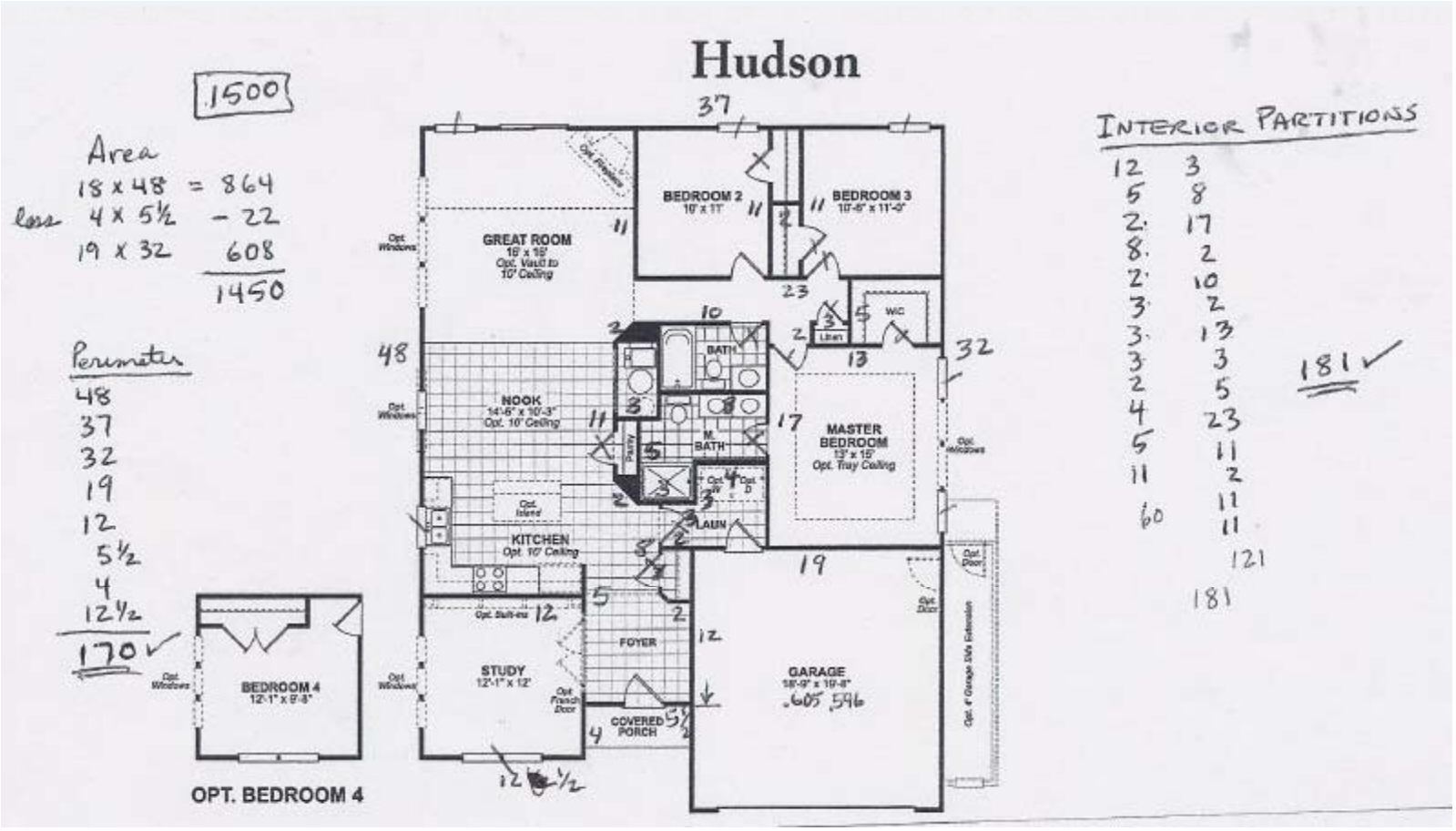

Cost Schedules for the 2012 Reassessment

Summarizing House Plan Data in Excel

CONSTRUCTION STATISTICS FOR ONE STORY RANCH STYLE HOMES 1200 SQ FT

	1200SF					Windows					Doors - Entrance plus			Single		Roof	Gable		
#	Total SF	Ratio	Perim	Interior	Ratio	Single	Double	Triple	Total		Std Exterior	French Ext	Sliding	Std Interior	BiFold*	Pitch	Ends	Ct	Avg
1	1184	0.15	183	143	0.78	9	1	0	11		1	0	1	9	6	6	45-45	2	45
2	1200	0.12	144	147	1.02	1	4	1	12		1	0	1	6	8	6	28-28-22	3	26
3	1198	0.13	150	150	1.00	8	1	0	10		1	0	1	9	1	7	28-22-12	3	22
4	1200	0.12	140	120	0.86	5	2	1	12		1	0	0	6	2	6	30-30	2	30
5	1196	0.12	147	154	1.05	5	1	0	7		2	0	0	7	4	7	28-28	2	28
6	1200	0.12	139	124	0.89	3	0	0	3		0	2	0	6	6	8	32-32	2	32
7	1198	0.14	162.5	132	0.81	7	0	0	7		1	1	0	10	0	7	20-20-20	3	20
8	1200	0.12	146	141	0.97	6	1	0	8		2	0	0	8	5	6	30-30-18	3	26
9	1197	0.12	141.5	129	0.91	3	6	0	15		2	0	0	9	3	5	Hip		
10	1200	0.12	145	168	1.16	2	5	0	12		1	0	0	4	5	5	24-30-30	3	28
11																			
avg	**1197.3**	**0.13**	**149.8**	**140.8**	**0.94**	**4.90**	**2.10**	**0.20**	**9.70**		**1.20**	**0.30**	**0.30**	**7.40**	**4.00**	**6.30**		**2.56**	**28.6**
	1200		150	142															
med	**1199.0**	**0.12**	**145.5**	**142.0**	**0.94**	**5.00**	**1.00**	**0.00**	**10.50**		**1.00**	**0.00**	**0.00**	**7.50**	**4.50**	**6.00**		**3.00**	**28.0**
	1200		146	137															

* or sliding

600SF 800SF 1000SF **1200SF** 1300SF 1400SF 1500SF 1600SF 1800SF 2400SF 3200SF 4000SF

Cost Schedules for the 2012 Reassessment

New Cost Model Creation Steps

- Place Cost Model Assumptions in the benchmark model size calculation worksheet
- Organize cost information in Excel using UNIFORMAT II
- Place elemental component and assembly unit costs in spreadsheet
- Calculate building costs at benchmark square foot building sizes

Cost Schedules for the 2012 Reassessment

Benchmark model calculation worksheet by size

Cost Source: Craftsman Book Co															12/1/2010
2011 National Construction Estimator					INDIANA 2011 REPLACEMENT COST NEW (RCN) MODEL WORKSHEET										
					Average Quality 'C' Class - "Standard or Normal Construction"										
					COST MODEL ASSUMPTIONS										
ITEM															
Base Floor Size	**100**	**400**	**600**	**800**	**1000**	**1200**	**1300**	**1400**	**1500**	**1600**	**1800**	**2400**	**3200**	**4000**	**5000**
Half Upper Floor Usable SF @ 59% of Base	59	236	354	472	590	708	767	826	885	944	1062	1416	1888	2360	2950
3/4 Upper Floor Usable SF @ 78% of Base	78	312	468	624	780	936	1014	1092	1170	1248	1404	1872	2496	3120	3900
Attic Usable SF @ 40% of Base	40	160	240	320	400	480	520	560	600	640	720	960	1280	1600	2000
Perimeter Linear Feet	50	82	106	120	137	156	165	170	178	186	204	234	303	360	425
One Story Perimeter LF shared with Att Garage	20	20	24	27	27	27	27	27	27	27	27	27	27	27	27
Two Story Perimeter LF shared with Att Garage	20	20	22	25	32	32	32	32	32	32	32	32	32	32	32
Average Gable End Width	8	16	24	27	29	30	32	32	32	33	35	36	38	40	40
Number of gable Ends	2	2	2	2.5	2.5	2.5	2.5	2.5	2.5	2.5	2.5	2.5	2.5	3	4
Standard Roof Pitch	6	6	6	6	6	6	6	6	6	6	6	6	6	6	6
Half Story Roof Pitch with dormer factor	9	9	9	9	9	9	9	9	9	9	9	9	9	9	9
Attic Roof Pitch - no dormers	7	7	7	7	7	7	7	7	7	7	7	7	7	7	7
Standard Gable End Wall Area (pitch=6)	16	64	144	228	263	281	320	320	320	340	383	405	451	600	800
Gable End Wall Area for 1/2 Story (pitch=9)	24	96	216	342	394	422	480	480	480	510	574	608	677	900	1200
Gable End Wall Area for Attic (pitch=7)	19	75	168	266	307	328	373	373	373	397	447	473	526	700	933
Standard Pitch Roof Area (with overhang)	112	448	672	896	1120	1344	1456	1568	1680	1792	2016	2688	3584	4480	5600
Roof Area for 1/2 Story Pitch (with overhang)	126	504	756	1008	1260	1512	1638	1764	1890	2016	2268	3024	4032	5040	6300
Roof Area for Attic Story Pitch (with overhang)	116	464	696	928	1160	1392	1508	1624	1740	1856	2088	2784	3712	4640	5800
Dormer Linear Feet to Base Size Factor	0.0250	0.0152	0.0133	0.0117	0.0108	0.0093	0.0082	0.0077	0.0073	0.0069	0.0062	0.0050	0.0047	0.0045	0.0043
Linear Feet of Dormer for Half Story	3	6	8	9	11	11	11	11	11	11	11	12	15	18	22
One Story Home Interior Partitions LF	12	47	71	94	118	142	154	165	177	188	212	282	366	450	560
1st Floor Interior Partitions of Two Story Home	8	32	48	64	80	96	104	112	120	130	148	196	262	330	416
Interior Partition LF Adjust of Two Story Home	(4)	(15)	(23)	(30)	(38)	(46)	(50)	(53)	(57)	(58)	(64)	(86)	(104)	(120)	(144)
Full Upper Floor Interior Partitions LF	18	68	98	126	150	176	188	192	204	216	242	316	410	504	620
Half Story Interior Partitions LF	19	71	103	132	138	151	165	178	190	201	220	245	318	391	481
Attic Interior Partitons LF @ 50% of Half Story	10	36	52	66	69	76	83	89	95	101	110	123	159	196	241
Exterior Doors Excluding Main Entrance	1	1	1	1	2	2	2	2	2	2	2	2	2	3	4
Std Interior Doors of One Story Homes	1	3	4	6	8	9	11	11	11	12	12	14	16	22	30
1st Floor Std Interior Doors of Two Story Homes	1	2	3	4	5	5	5	6	6	7	7	9	12	16	20
Std Interior Door Adjust of Two Story Home	0	(1)	(1)	(2)	(3)	(4)	(6)	(5)	(5)	(5)	(5)	(5)	(4)	(6)	(10)
Full Upper Floor Std Interior Doors	2	4	6	8	10	10	10	10	10	12	14	16	18	21	24

Cost Schedules for the 2012 Reassessment

Closer look at Cost Model Assumptions: **Exterior Closure & Roof**

G18 | =ROUND(G$13*((0.5*G$12*G15)/12)*0.5*G$12,0)

	A	D	E	F	G	H	I	J	K
1	**Cost Source: Craftsman Book Co**	**INDIANA 2011 REPLACEMENT COST NEW (RCN) MODEL WORKSHEET**							
2	**2011 National Construction Estimator**	**Average Quality 'C' Class - "Standard or Normal Construction"**							
3				***COST MODEL ASSUMPTIONS***					
4	**ITEM**								
5	**Base Floor Size**	**600**	**800**	**1000**	**1200**	**1300**	**1400**	**1500**	**1600**
6	Half Upper Floor Usable SF @ 59% of Base	354	472	590	708	767	826	885	944
7	3/4 Upper Floor Usable SF @ 78% of Base	468	624	780	936	1014	1092	1170	1248
8	Attic Usable SF @ 40% of Base	240	320	400	480	520	560	600	640
9	Perimeter Linear Feet	106	120	137	156	165	170	178	186
10	One Story Perimeter LF shared with Att Garage	24	27	27	27	27	27	27	27
11	Two Story Perimeter LF shared with Att Garage	22	25	32	32	32	32	32	32
12	Average Gable End Width	24	27	29	30	32	32	32	33
13	Number of gable Ends	2	2.5	2.5	2.5	2.5	2.5	2.5	2.5
14	Standard Roof Pitch	6	6	6	6	6	6	6	6
15	Half Story Roof Pitch with dormer factor	9	9	9	9	9	9	9	9
16	Attic Roof Pitch - no dormers	7	7	7	7	7	7	7	7
17	Standard Gable End Wall Area (pitch=6)	144	228	263	281	320	320	320	340
18	Gable End Wall Area for 1/2 Story (pitch=9)	216	342	394	422	480	480	480	510
19	Gable End Wall Area for Attic (pitch=7)	168	266	307	328	373	373	373	397
20	Standard Pitch Roof Area (with overhang)	672	896	1120	1344	1456	1568	1680	1792
21	Roof Area for 1/2 Story Pitch (with overhang)	756	1008	1260	1512	1638	1764	1890	2016
22	Roof Area for Attic Story Pitch (with overhang)	696	928	1160	1392	1508	1624	1740	1856

Cost Schedules for the 2012 Reassessment

Closer look at Cost Model Assumptions:

Part Upper Story

D41 =AVERAGE($F4:$F27)

	A	B	C	D	E	F	G	H	I	J
1					PART UPPER STORY HOUSE PLAN DATA					
2			Base	Upper						
3	#	Ref	SF	SF	Type	Ratio				
4	1	1750p9	768	515	150	67.1%				
5	2	1750p5	864	528	150	61.1%				
6	3	1500p4	888	400	150	45.0%				
7	4	1750p8	960	537	150	55.9%				
8	5	2250p1	975	645	150	66.2%				
9	6	1750p2	982	561	150	57.1%				
10	7	1750p7	1020	483	150	47.4%				
11	8	2250p5	1054	651	150	61.8%				
12	9	1750p4	1072	537	150	50.1%				
13	10	2250p7	1080	677	150	62.7%				

40	*All*	*1.50 Story SF % of Base*			***1.5s Base Area:***	**800**	**1000**	**1200**	**1600**	**1800up**
41		**Mean %**		**58.9%**		**57.7%**	**57.3%**	**53.7%**	**65.7%**	**63.4%**
42		**Median %**		**58.9%**		**61.1%**	**57.1%**	**57.0%**	**68.8%**	**61.4%**
43	*All*	*1.75 Story SF % of Base*			***Count:***	**3**	**7**	**5**	**4**	**3**
44		**Mean %**		**77.6%**						
45		**Median %**		**78.3%**						

Cost Schedules for the 2012 Reassessment

Closer look at Cost Model Assumptions: **Part Upper Story Size**

Story Living Area Calculation from ANSI Z765-2003

The figure below illustrates a 28 by 42 foot house with part upper living area discussed in the ANSI house measurement standard **Commentary** section. Without dormers, the construction configuration described would allow a part upper story size of 525 square feet of living area on the upper level, which is 44.6% of the first floor living area (roof pitch is 7.7” per 12”).

AMERICAN NATIONAL STANDARD FOR SINGLE-FAMILY RESIDENTIAL BUILDINGS

FOR CALCULATING: ANSI Z765-2003

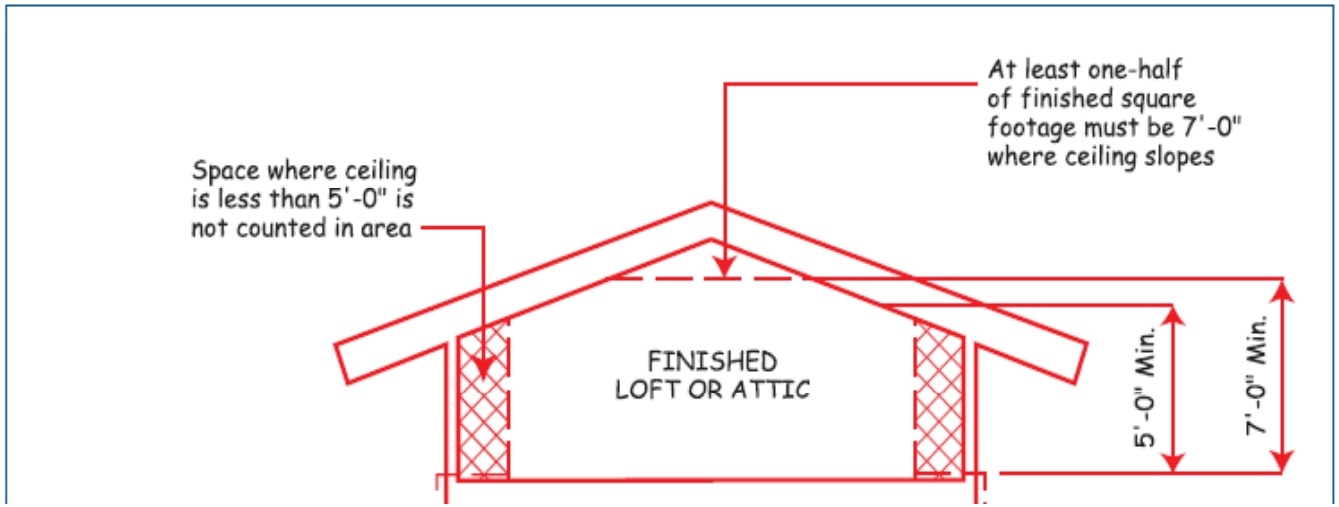

Cost Schedules for the 2012 Reassessment

Closer look at Cost Model Assumptions: **Roof Pitch**

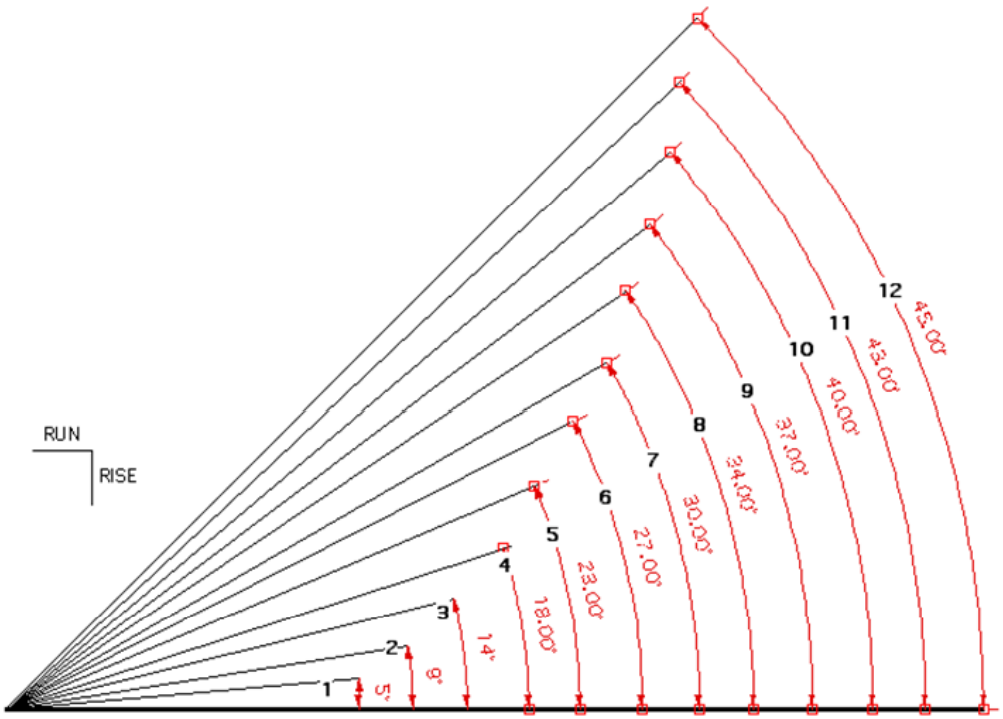

ROOF PITCH
is measured in inches of rise per foot of run.

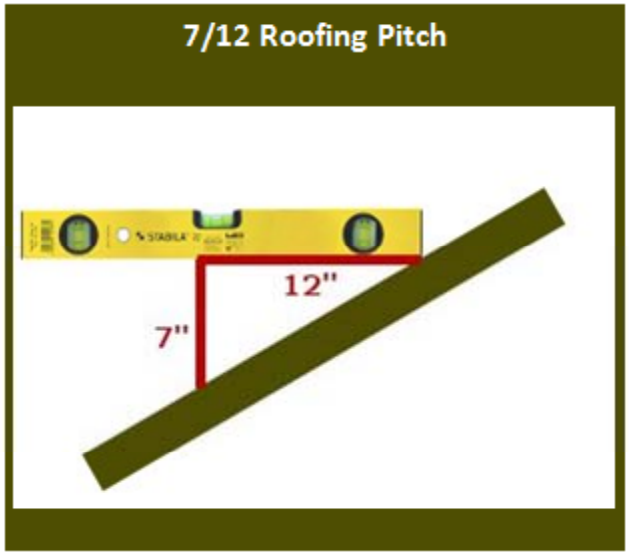

Cost Schedules for the 2012 Reassessment

Closer look at Cost Model Assumptions:
Roof Pitch & Usable Area

Empirical research conducted to establish cost model assumptions revealed that

- Standard roof pitch for one & two story houses with no upper level should be 6/12
- Roof pitch for attic upper level should be 7/12 giving usable area of 40% of the base area
- Roof pitch of half story level should be 9/12 giving usable area of 59% of the base area
- Three-quarter story is ½ full upper story and ½ half story with usable area of 78% of the base

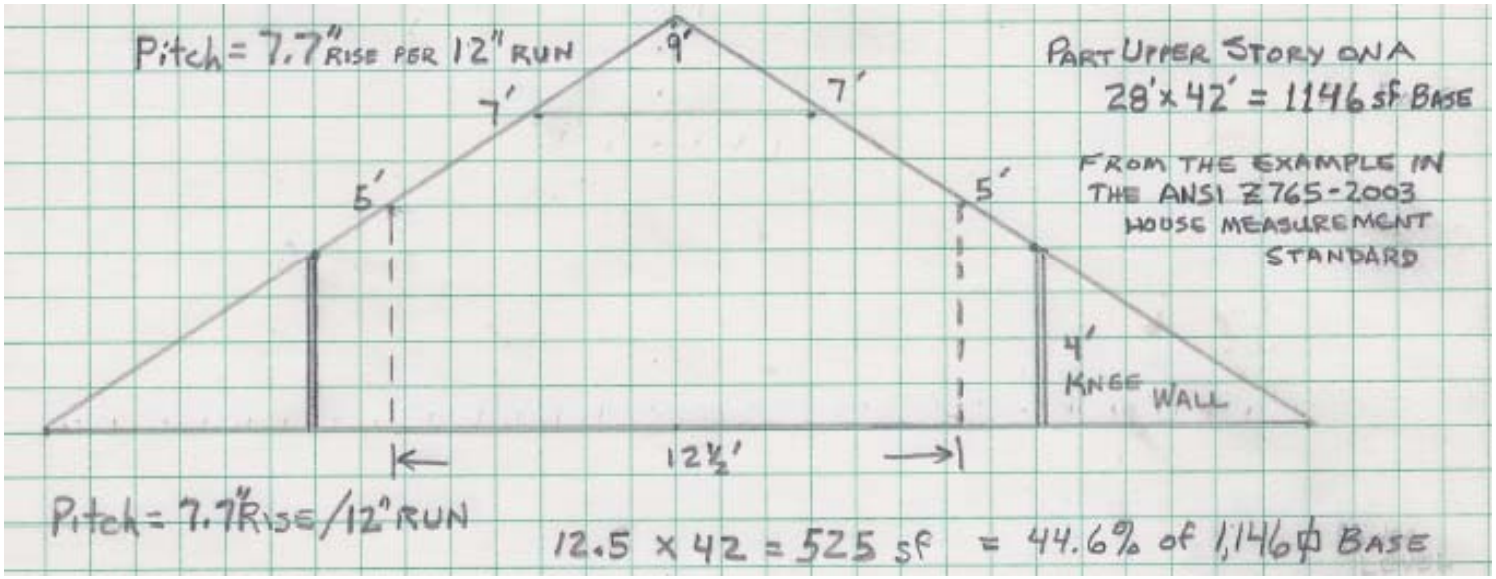

Cost Schedules for the 2012 Reassessment

Closer look at Cost Model Assumptions: **Part Upper Story Costs**

- How do the half story & attic cost model assumptions translate into cost schedules?
  - Roof pitch for attic upper level should be 7/12 giving usable area of 40% of the base area
  - Roof pitch of half story level should be 9/12 giving usable area of 59% of the base area
- Structural costs
  - Attic requires floor joists, subfloor, permanent stairway, and more roof material
  - Half story requires even more roof material, generally has dormers, and a better stairway
  - Additional unfinished structure costs apply to the entire base area, say 1200 sqft
- Finished living area costs for part upper story levels
  - Attic: max of 40% relative to the base can be finished … ½ finished means 20%
    - "Full finished" means 480 sqft on a 1200 sqft base area, ½ finished means 240 sqft
    - If attic finish cost were $25/sqft, that is $12,000 for full finish and $6,000 for ½ finished
    - Spread over the 1200 sqft base, full finish adds $10 per sqft, ½ finished adds $5 per sqft
  - Half story: max of 59% relative to the base can be finished … ½ finished means 29.5%
    - "Full finished" means 708 sqft on a 1200 sqft base area, ½ finished means 354 sqft finished
    - If half story finish cost were $30/sqft, that is $21,240 for full finish and $10,620 for ½ finished
    - Spread over the 1200 sqft base, full finish adds $17.70 per sqft, ½ finished adds $8.85 per sqft

Cost Schedules for the 2012 Reassessment

Closer look at Cost Model Assumptions: **Interior Walls**

- Why is it important to know the LF of interior walls?
  - Interior walls are expensive to build
  - Modern floor plans use more of an "open design"
    - Most offices are an open design with far fewer interior partitions
    - 1st floor plan of a 2-story home is different (more open) than a 1-story home
  - Full upper story and part upper story are also different
  - Using 2010 partition assembly costs for 2x4 walls:
    - Partition wall assemblies cost $6.36 per sqft
    - This is $50.88 per LF for an 8' interior partition
    - Hence, accurate cost model estimates important

- Next slide shows interior wall assembly cost components

Cost Schedules for the 2012 Reassessment

2X4 INTERIOR PARTITION WALL ASSEMBLY, RESIDENTIAL RATES

Description	Craft@Hrs	Unit	Material	Labor	Total	Notes
Wall Framing Material						
2X4 HF Lumber (Delivered)	-	SF	0.44	-	$ 0.44	*1.12 BF Per SF of Wall*
16d Bright Nails	-	SF	0.04	-	$ 0.04	*20 Lbs Nails Per 1,000 SF Wall*
Wall Framing Labor						
Frame Wall, 16" On Center	B1@0.023	SF	-	0.77	$ 0.77	*Cont. Single Sole & Top Plates*
Drywall Material *Unit Prices Account For Both Sides of Wall*						
½" Gypsum Wallboard	-	SF	0.44	-	$ 0.44	*4X8 Sheets*
Joint Tape	-	SF	0.03	-	$ 0.03	*760 LF of Tape per 2,000 SF*
Joint Compound (1st & Skim Coat)	-	SF	0.45	-	$ 0.45	*.22 Lbs of Compound PSF Surface*
1 5/8" Drywall Screws	-	SF	0.10	-	$ 0.10	*12 Lbs of Screws Per 2,000 SF*
Drywall Labor *Unit Prices Account For Both Sides of Wall*						
Cut, Hang & Secure 1/2" GWB	DI@0.015	SF	-	0.53	$ 0.53	*Select Opening Cuts Included*
Apply Tape & Compound	PR@0.014	SF	-	0.52	$ 0.52	*.15 Lbs of Compound PSF*
Sand Joints	HC@0.009	SF	-	0.25	$ 0.25	*Level 4 Finish*
Apply Skim Coat	PR@0.012	SF	-	0.45	$ 0.45	*.07 Lbs of Compound PSF*
Finish Sanding	PR@0.014	SF	-	0.52	$ 0.52	*Level 4 Finish*
Prime/Paint Material *Unit Prices Account For Both Sides of Wall*						
Primer, Latex	-	SF	0.06	-	$ 0.06	*380 SF Coverage Per Gallon*
Paint, Latex	-	SF	0.10	-	$ 0.10	*430 SF Coverage Per Gallon*
Masking Tape	-	SF	0.02	-	$ 0.02	*500 LF of Tape Per 2,000 SF Wall*
Plastic Sheeting	-	SF	0.01	-	$ 0.01	
Prime/Paint Labor *Unit Prices Account For Both Sides of Wall*						
Mask/Cover Prep Work	PP@0.005	SF	-	0.17	$ 0.17	*Sheeting on Floor, Tape Transistions*
Prime, Rolled	PP@0.011	SF	-	0.37	$ 0.37	
Paint, Rolled, 1st Coat	PP@0.021	SF	-	0.70	$ 0.70	*With Cut-In at Ceiling Transition*
Paint, Rolled, 2nd Coat	PP@0.011	SF	-	0.37	$ 0.37	*With Cut-In at Ceiling Transition*
Touch Ups	PP@0.001	SF	-	0.02	$ 0.02	*Minor, With Brush*
TOTAL COST PER SQUARE FOOT OF WALL					$ 6.36	

Cost Schedules for the 2012 Reassessment

Closer look at Cost Model Assumptions: **Interior Walls**

G27 | fx | =G26-G25

	A	D	E	F	G	H	I	J	K
1	**Cost Source: Craftsman Book Co**	**INDIANA 2011 REPLACEMENT COST NEW (RCN) MODEL WORKSHEET**							
2	**2011 National Construction Estimator**	**Average Quality 'C' Class - "Standard or Normal Construction"**							
3		***COST MODEL ASSUMPTIONS***							
4	**ITEM**								
5	**Base Floor Size**	**600**	**800**	**1000**	**1200**	**1300**	**1400**	**1500**	**1600**
22	Roof Area for Attic Story Pitch (with overhang)	696	928	1160	1392	1508	1624	1740	1856
23	Dormer Linear Feet to Base Size Factor	0.0133	0.0117	0.0108	0.0093	0.0082	0.0077	0.0073	0.0069
24	Linear Feet of Dormer for Half Story	8	9	11	11	11	11	11	11
25	One Story Home Interior Partitions LF	71	94	118	142	154	165	177	188
26	1st Floor Interior Partitions of Two Story Home	48	64	80	96	104	112	120	130
27	Interior Partition LF Adjust of Two Story Home	(23)	(30)	(38)	(46)	(50)	(53)	(57)	(58)
28	Full Upper Floor Interior Partitions LF	98	126	150	176	188	192	204	216
29	Half Story Interior Partitions LF	103	132	138	151	165	178	190	201
30	Attic Interior Partitons LF @ 50% of Half Story	52	66	69	76	83	89	95	101

Cost Schedules for the 2012 Reassessment

Closer look at Cost Model Assumptions: **Doors & Windows**

G34 | =G33-G32

	A	D	E	F	G	H	I	J	K
1	**Cost Source: Craftsman Book Co**	**INDIANA 2011 REPLACEMENT COST NEW (RCN) MODEL WORKSHEET**							
2	**2011 National Construction Estimator**	**Average Quality 'C' Class - "Standard or Normal Construction"**							
3		***COST MODEL ASSUMPTIONS***							
4	**ITEM**								
5	**Base Floor Size**	**600**	**800**	**1000**	**1200**	**1300**	**1400**	**1500**	**1600**
31	Exterior Doors Excluding Main Entrance	1	1	2	2	2	2	2	2
32	Std Interior Doors of One Story Homes	4	6	8	9	11	11	11	12
33	1st Floor Std Interior Doors of Two Story Homes	3	4	5	5	5	6	6	7
34	Std Interior Door Adjust of Two Story Home	(1)	(2)	(3)	(4)	(6)	(5)	(5)	(5)
35	Full Upper Floor Std Interior Doors	6	8	10	10	10	10	10	12
36	Half Story Std Interior Doors	5	7	7	7	7	7	7	7
37	Attic Std Interior Doors	4	4	4	4	4	4	4	4
38	Int Bi-fold or Sliding Doors -Any Floor ex-Attic	2	2	2	2	2	2	2	2
39	Single Window Equiv (SWE) of One Story Homes	5	8	9	10	10	10	10	10
40	1st Floor SWE of Two Story Homes	5	6	6	7	9	9	9	9
41	SWE Adjustment for Two Story Homes	0	(2)	(3)	(3)	(1)	(1)	(1)	(1)
42	Full Upper Floor Single Window Equivalents	6	6	6	6	7	8	8	8
43	Half Story/Attic Single Window Equivalents	2	2	2	2	2	2	2	2

Cost Schedules for the 2012 Reassessment

New Cost Model Creation Steps

- Place Cost Model Assumptions in the benchmark model size calculation worksheet (previous slides)

Following Slides:

- Organize information in Excel using UNIFORMAT II
- Place elemental component and assembly unit costs in spreadsheet
- Calculate building costs at benchmark square foot and/or PAR building sizes

Cost Schedules for the 2012 Reassessment

Organize information in Excel using UNIFORMAT II

Figure 1. ASTM UNIFORMAT II - Classification of Building Elements (E1557-97)

ASTM UNIFORMAT II - Classification of Building Elements (E1557-97)		
Level 1 Major Group Elements	**Level 2 Group Elements**	**Level 3 Individual Elements**
A. SUBSTRUCTURE	A10 Foundations	A1010 Standard Foundations A1020 Special Foundations A1030 Slab on Grade
	A20 Basement Construction	A2010 Basement Excavation A2020 Basement Walls

45	**UNIFORMAT II Computational Detail**
46	A. SUBSTRUCTURE
47	A10 Foundations
48	A1010 Standard Foundations
49	One Story Structure
50	1.5 or Two Story Structure
51	A1020 Special Foundations
52	A1030 Slab on Grade
53	A20 Basement Construction
54	A2010 Basement Excavation
55	A2020 Basement Walls

Cost Schedules for the 2012 Reassessment

Dwelling Foundation Cost Computation Example

Real Property Assessment Guide – Version A, Table A-3 Grade C, Page 10 (Referenced as "Table A-3")

Table A-3 Foundations: 8" poured concrete or 8" concrete block

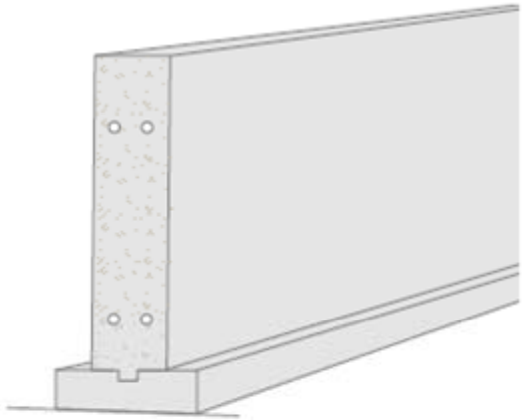

Footing with keyway

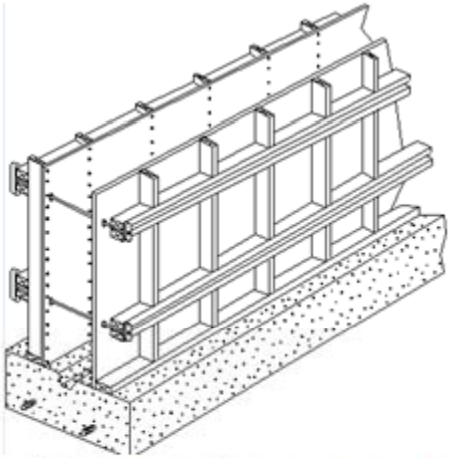

Forms for a poured concrete stem wall

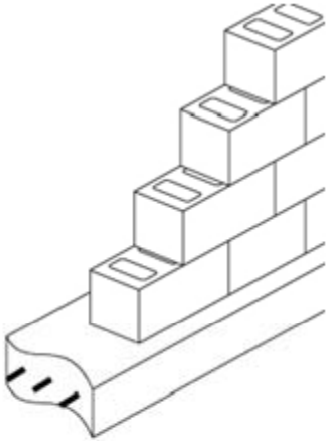

Concrete blocks on footing

A stem wall placed on a spread footing (or simply *footing*) has long been considered the standard foundation. The spread footing distributes the weight of the structure over a larger area. A residential footing is usually 18 inches wide and 8 inches deep. It's normally reinforced with two horizontal bars of #4 grade 60 or #5 grade 40 steel reinforcement. You attach the spread footing to the stem wall with a keyway and/or steel rebar dowel uprights (Diller & Diller, p 150, 159, NCE, p. 92-93).

Cost Schedules for the 2012 Reassessment

Applying the 2011 Craftsman Cost Data

Dwelling Foundation Cost Computation Example (Cont'd)

Craftsman Assembly: Continuous concrete footing with foundation stem wall. These figures assume the foundation stem wall projects 24" above the finished grade and extends into the soil 18" to the top of the footing. Costs shown include typical excavation using a 3/4 CY backhoe with excess backfill spread on site, forming both sides of the foundation wall and the footing, based on three uses of the forms and 2 #4 rebar. Use $1,200.00 as a minimum cost for this type work (NCE, p. 92).

2011 Costs	Craft@Hrs		Unit Material	Labor*	Equipment	Total
Typical cost per CY	B5@7.16	CY	156.00	254.00	50.90	463.90
Typical single story structure, footing 12" W x 8" D, wall 6" T x 42" D (.10 CY per LF)	B5@.716	LF	15.90	25.40	5.09	46.39
Typical two story structure, footing 18" W x 10" D, wall 8" T x 42" D (.14 CY per LF)	B5@1.00	LF	22.30	35.50	7.11	64.91
Typical three story structure, footing 24" W x 12" D, wall 10" T x 42" D (.19 CY per LF)	B5@1.36	LF	30.20	48.20	9.67	88.07

***Note: Labor costs for this assembly are down about 14% from 2010**

Cost Schedules for the 2012 Reassessment

Applying the 2011 Craftsman Cost Data

Dwelling Foundation Cost Computation Example (Cont'd)

5	**Base Floor Size**	**1000**	**1200**	**1300**	**1400**	**1500**	**1600**	**1800**	**2400**	**3200**	**4000**	**5000**
6	Half Upper Floor Usable SF @ 59% of Base	590	708	767	826	885	944	1062	1416	1888	2360	2950
7	3/4 Upper Floor Usable SF @ 78% of Base	780	936	1014	1092	1170	1248	1404	1872	2496	3120	3900
8	Attic Usable SF @ 40% of Base	400	480	520	560	600	640	720	960	1280	1600	2000
9	Perimeter Linear Feet	137	156	165	170	178	186	204	234	303	360	425

G49 =ROUND(G$9*$R49,0)

	A	F	G	H	I	J	K	L	M	N	O	P	Q	R
1	**Cost Source: Craftsman Book Co**	**1 REPLACEMENT COST NEW (RCN) MODEL WORKSHEET**										**12/1/2010**		
2	**2011 National Construction Estimator**	**e Quality 'C' Class - "Standard or Normal Construction"**												
3		***COST MODEL ASSUMPTIONS***												
4	**ITEM**													**Unit**
5	**Base Floor Size**	**1000**	**1200**	**1300**	**1400**	**1500**	**1600**	**1800**	**2400**	**3200**	**4000**	**5000**		**Cost**
39	Single Window Equiv (SWE) of One Story Homes	9	10	10	10	10	10	12	15	21	26	34		
40	1st Floor SWE of Two Story Homes	6	7	9	9	9	9	9	9	12	16	21		
41	SWE Adjustment for Two Story Homes	(3)	(3)	(1)	(1)	(1)	(1)	(3)	(6)	(9)	(10)	(13)		
42	Full Upper Floor Single Window Equivalents	6	6	7	8	8	8	8	8	10	12	14		
43	Half Story/Attic Single Window Equivalents	2	2	2	2	2	2	2	2	2	2	2		
44														
45	**UNIFORMAT II Computational Detail**													
46	A. SUBSTRUCTURE													
47	A10 Foundations													
48	A1010 Standard Foundations													
49	One Story Structure	6355	7237	7654	7886	8257	8629	9464	10855	14056	16700	19716		**46.39**
50	1.5 or Two Story Structure	8893	10126	10710	11035	11554	12073	13242	15189	19668	23368	27587		**64.91**

Cost Schedules for the 2012 Reassessment

2012 Residential Cost Table % Changes from 2002

Appendix C - Schedule A

Dwelling Base Price changes at 15 Benchmark Points (in hundreds of dollars - rounded)

Note: Case-Shiller Home Price Index for Chicago: April 2002 was 119.64 , May 2007 was 170.14, April 2011 was 113.45

	First Floor			Half Upper Floor			(+/- 1)		Full Upper Story			Unfin	Attic	Unfin		Bsmt
	1-5	+	6-8	1-5	+	6-8	1-5	6-8	1-5	+	6-8	Attic	Fin	Bsmt	Crawl	Fin
Size																
100	67%	33%	61%	70%	n/a	45%	50%	113%	64%	67%	69%	131%	-16%	176%	92%	7%
400	38%	17%	34%	27%	n/a	12%	4%	41%	20%	17%	20%	37%	-7%	62%	24%	38%
600	35%	13%	33%	22%	n/a	10%	-8%	23%	12%	29%	14%	17%	0%	52%	13%	41%
800	32%	22%	30%	11%	-75%	2%	-30%	7%	-1%	25%	3%	6%	1%	42%	0%	35%
1000	29%	10%	28%	0%	-75%	-7%	-30%	4%	-8%	33%	-3%	-3%	-10%	36%	-5%	30%
1200	25%	18%	24%	-9%	-80%	-15%	-26%	9%	-13%	30%	-8%	-9%	-21%	35%	-9%	24%
1300	23%	17%	23%	-12%	-80%	-17%	-21%	9%	-14%	30%	-9%	-12%	-23%	34%	-10%	22%
1400	20%	17%	20%	-14%	-80%	-19%	-20%	8%	-16%	30%	-11%	-14%	-25%	31%	-14%	20%
1500	18%	15%	18%	-16%	-80%	-21%	-21%	9%	-17%	27%	-13%	-16%	-27%	31%	-16%	18%
1600	16%	23%	17%	-18%	-83%	-23%	-16%	12%	-18%	36%	-13%	-18%	-29%	29%	-16%	18%
1800	16%	21%	17%	-21%	-83%	-24%	-17%	13%	-20%	33%	-14%	-21%	-31%	29%	-17%	16%
2400	12%	19%	13%	-27%	-71%	-30%	-17%	13%	-24%	43%	-18%	-25%	-36%	26%	-25%	13%
3200	14%	33%	15%	-29%	-75%	-31%	-12%	23%	-25%	63%	-18%	-29%	-39%	30%	-23%	12%
4000	13%	45%	15%	-30%	-78%	-32%	-10%	23%	-26%	72%	-18%	-30%	-40%	31%	-24%	11%
5000	13%	48%	15%	-25%	-70%	-32%	-14%	22%	-27%	85%	-19%	-31%	-41%	31%	-26%	11%

Cost Schedules for the 2012 Reassessment

2012 Residential Cost Table Test Results

Using 28 New Construction Model Homes from Indianapolis Home Builders

Advertised prices of the model homes located on the builders' websites in March of 2011 were used to compare with the initial cost estimates using Craftsman costs with their Indianapolis local cost modifier – the difference is the VEM.

Also, Craftsman labor rates were found to be high when compared to the Indiana Department of Labor Marion County construction industry labor rates.

Summary of Test Findings - New Construction Homes	Median Sales Ratio (Median)			Coefficient of Dispersion (COD)		
13 1-story & 15 2-story model homes from 4 Indianapolis area builders	1-story	2--story	Combined	1-story	2--story	Combined
Initial Indiana Cost Model Estimates using Craftsman NCE	1.30	1.40	1.36	4.25	4.20	4.99
without Verified Economic Modifier (VEM)						
Final 2012 Cost Table Estimates using Craftsman NCE	1.02	1.09	1.06	3.84	4.08	4.75
with Verified Economic Modifier (VEM) adjustment						
Craftsman Nat'l Building Cost Manual Estimates	1.23	1.40	1.26	4.30	5.11	7.30
from estimating tables by size using Craftsman model assumptions						

Cost Schedules for the 2012 Reassessment

2009-2010 Residential Sales - RCN/RCNLD Test Results

Using the new 1012 cost schedules with *no neighborhood adjustments*

		Count	Crawl	Basmt	Frame	Brick	Median	COD	Count	Median	COD
	Base Homes on Slab (RCN)						Johnson County		Allen County 2010 Sales		
1	1-Story C Grade built 2001 - 2010	177	No	No	Yes	No	1.13	9.31	345	1.08	7.92
2	2-Story C Grade built 2001 - 2010	347	No	No	Yes	No	1.17	9.77	215	1.11	7.53
	Homes Graded Above C (RCN)										
3	1-Story Higher Grade built 2001 - 2010	98	Yes	Yes	Yes	Yes	1.12	9.80			
4	2-Story Higher Grade built 2001 - 2010	83	Yes	Yes	Yes	Yes	1.14	9.51			
5	All Higher Grade analyzed together	181	Yes	Yes	Yes	Yes	1.13	9.72			
	Analysis of Homes Sold in 2009-2010 (RCN)										
6	All Homes All Grades built 2001 - 2010	853	Yes	Yes	Yes	Yes	1.14	10.17			
7	All Homes All Grades built 1991 - 2000	703	Yes	Yes	Yes	Yes	1.13	10.04			
8	All Homes All Grades built 1971 - 1990	470	Yes	Yes	Yes	Yes	1.18	11.98			
9	All Homes All Grades built 1951 - 1970	276	Yes	Yes	Yes	Yes	1.27	11.26			
10	All Homes All Grades built pre-1951	125	Yes	Yes	Yes	Yes	1.32	19.95			
	RCN with NO depreciation adjustment:										
11	All Homes - built in all years, no depr	2,427	Yes	Yes	Yes	Yes	1.17	11.78			
12	All Grade "C" Homes - all years, no depr	1,920	Yes	Yes	Yes	Yes	1.18	11.55	2,200	1.22	14.83
	RCNLD using 2002 depreciation schedule										
13	All Homes All Grades - all years, 2002 depr	2,427	Yes	Yes	Yes	Yes	0.97	14.23			
14	All Grade "C" Homes - all years, 2002 depr	1,920	Yes	Yes	Yes	Yes	0.97	13.84	2,200	1.03	9.16
	RCNLD with local depreciation schedule:										
15	All Homes All Grades - all years w/RCNLD	2,427	Yes	Yes	Yes	Yes	1.01	11.01			
16	All Grade "C" Homes - all years w/RCNLD	1,920	Yes	Yes	Yes	Yes	1.00	10.78	2,200	1.00	9.02

Cost Schedules for the 2012 Reassessment

Size Analysis of 10,252 Commercial/Industrial Marion Co 1st Floor sizes

Note that many GCM & GCI Uses are coded as Wood Joist Type 1 Construction

Also note the difference between Mean and Median sizes - big size variation

- Requires economies of scale adjustments

"One model fits all" for each *Use Type* creates value estimation challenges

"One GCI shell model fits all" creates challenges: Mill Mfg. vs. Mini-warehouse

Frame Type 1 (GCR) Sizes						
	Count	Median	Mean	Std Dev	Min	Max
APART	3,284	10,950	13,514	11,088	744	122,344
DISCOUNT	22	13,451	34,935	50,241	912	203,720
GENOFF	865	4,114	6,276	7,236	500	79,977
GENRET	1087	2,924	4,474	5,463	504	62,759
INDOFF	67	3,402	6,928	10,147	558	62,075
LMFG	72	14,527	44,880	173,010	768	1,453,830
LWRHSE	305	10,300	25,479	54,925	720	708,243
NBHSHOP	75	12,000	19,794	20,635	1,400	147,057
NURSHOME	45	31,589	33,080	20,518	2,008	110,849
SMSHOP	138	4,279	5,952	5,800	500	42,860
Weighted Mean	**5,960**		**11,863**			

Frame Type 2-4 (GCM-GCI) Sizes						
	Count	Median	Mean	Std Dev	Min	Max
APART	48	17,318	22,962	20,605	1,123	101,022
DISCOUNT	183	22,464	54,076	59,645	2,800	237,178
GENOFF	756	12,647	28,402	40,056	504	335,936
GENRET	923	4,525	7,862	13,280	507	217,344
INDOFF	261	9,000	22,247	29,207	506	139,280
LMFG	267	26,476	49,645	73,864	684	535,889
LWRHSE	1204	29,900	62,398	102,002	1,152	1,412,826
NBHSHOP	277	15,504	25,593	32,492	551	374,636
NURSHOME	19	35,537	36,657	27,113	6,363	110,849
PARKGAR	59	66,578	89,472	74,499	510	342,164
SMSHOP	295	5,746	10,831	17,102	608	194,808
Weighted Mean	**4,292**		**34,990**			

Cost Schedules for the 2012 Reassessment

Commercial Cost Model Data PAR/Size Points

- Microsoft Excel ***Solver*** used to determine model benchmark data:
  - found the best dimensions for each PAR
  - set the object function to minimize perimeter for each PAR and size
  - by allowing *Solver* to adjust the length and width dimensions
  - perimeter had to always be greater as size increased
- PAR = 100 x (Perimeter Linear Feet / Floor Area Square Feet)
- Example: For a 200 x 200 building, PAR = 100 x 800/40000 = 2

PAR	0.5	1	1.5	2	3	4	5	6	7	8	9	10	11	12	13
Area	640000	160000	80000	40000	24000	16000	12500	10000	7500	5000	4100	3250	1800	1320	1000
Perimeter	3200	1600	1200	800	720	637	622	598	524	403	368	324	198	158	130
Exact PAR	0.50	1.00	1.50	2.00	3.00	3.98	4.98	5.98	6.99	8.06	8.98	9.97	11.00	11.97	13.00
Dimensions	800x800	400x400	200x400	200x200	85x329	62.5x256	47.5x264	38x261	33x228	29x172	26x158	24x138	24x75	24x55	25x40

Cost Schedules for the 2012 Reassessment

Commercial model assumptions are in Appendix D:

General Commercial Mercantile Models

This section describes the general commercial mercantile models (GCM).

GCM Basic Shell Components

Site Preparation	Typical grading for a level site applicable to the ground floor area; bulk excavation applicable to basement area.
Foundation	
Wall types-1, 2, and 4	Concrete grade walls on concrete spread footings to support load bearing construction; concrete column footings and grade beams to support framed construction, perimeter insulation.
Frame	
Type-1	Wood and/or timber beams and columns; interior wood or steel floor and/or roof supports.
Type-2	Steel beams and columns; steel pipe floor and/or roof supports.
Type-3	Reinforced concrete beams and columns.
Type-4	Fire-proofed steel beams and columns.
Exterior Walls	
Type-1 Basement	Concrete block, waterproofing, insulation at finished areas.
Type-2 Basement	Concrete, waterproofing, insulation at finished areas.
Type-1 Upper	8" concrete block curtain walls; 12" load bearing concrete block walls; painted exterior.
Type-2 Upper	8" brick on concrete block back-up curtain walls; 12" brick on concrete block back-up load bearing walls.
Type-4 Upper	4' concrete panel guard walls 2'6" high.
Ground Floor	Concrete slab with wire mesh reinforcing at grade level, vapor barrier.
Structural Floors	
Type-1 Frame	Wood sub-floor on wood joists.
Type-2 Frame	Concrete on corrugated metal deck and steel joists.
Type-3 Frame	Concrete slab and joists.

Type-4 Frame	Concrete slab on steel joists.
Roof Structure	
Type-1 Frame	Flat roof, wood or composition deck on wood joists.
Type-2 Frame	Flat roof, steel deck on steel joists.
Type-3 Frame	Flat roof, concrete slab on concrete joists.
Type-4 Frame	Flat roof, steel deck on steel joists.
Roofing	Composition roofing, insulation
Interior Finish	See Occupancy Model - specific Components
Mechanical Features	See Occupancy Model - specific Components

MODEL	**GCM Apartments**
Floor Height	10'
Finish Type	Finished divided, 8' ceiling height
Interior Finish and Mechanical Features	
Walls	Two coats of paint on drywall, wood or metal furring
Flooring	30%vinyl composition tile; 65% carpet and pad; 5% ceramic tile
Ceiling	Taped and painted drywall on wood ceiling joists or metal channel supports
Partitions	Wood frame interior construction typical of occupancy
Lighting	Average cost installation typical of apartments.
HVAC	Heating only
Heating Only	Gas fired forced air
Cooling Additive	Add for air conditioning for one unit only from the Schedule C "Add for A.C." column. Air conditioning in multiple units is valued using the unit finish adjustment.
Plumbing	Not included. Plumbing is valued with the application of the unit finish adjustment.
Notes	Kitchen built-ins, plumbing and air conditioning are included by the

Cost Schedules for the 2012 Reassessment

Commercial models example – GCM Basic Shell Components - 1st floor

Base Floor Size	**24000**	**16000**	**12500**	**10000**	**7500**	**5000**	**4100**	**3250**
Perimeter Linear Feet	720	637	622	598	524	403	368	324
Perimeter-Area Ratio (PAR)	**3**	**4**	**5**	**6**	**7**	**8**	**9**	**10**
First floor level - GCM Basic Shell with 10' Wall Height								
Wall Type 1								
Site preparation and A1010 Standard Foundation	80096	68326	64781	61263	52738	40537	36738	32543
A1030 Slab on Grade	91440	60960	47625	38100	28575	19838	16593	13463
B1020 Roof Construction	243729	162486	126942	101554	76165	50777	41637	33007
B1030 Interior Roof Support Columns 10'	60160	47690	43270	39460	33240	24750	22110	19120
B2010 10' Type 1 Exterior Walls	59677	52797	51545	49560	43422	33395	30503	26847
B2020 Exterior Windows	24334	21538	21037	20223	17719	13628	12439	10957
B2030 Exterior Doors	49665	43917	42921	41234	36176	27822	25369	22380
D2020 Plumbing DWV rough-in and water supply piping	26986	18739	15000	12276	9468	6576	5501	4462
D2040 Rain Water Drainage	4284	3790	3700	3559	3118	2397	2190	1928
GCM Shell Components Cost - **10' Type 1 Wall**	640371	480243	416821	367229	300621	219720	193080	164707
Wall Type 2								
Cost difference for 10' Type 2 masonry exterior walls	80628	71332	69640	66962	58668	45120	41213	36272
GCM Shell Components Cost -10**' Type 2 Wall**	720999	551575	486461	434191	359289	264840	234293	200979
First floor level - GCM Basic Shell with 12' Wall Height								
Wall Type 1								
Cost difference from 10' to 12' Type 1 Exterior Walls	15955	14116	13783	13252	11612	8931	8155	7180
GCM Shell Components Cost - **12' Type 1 Wall**	668358	503897	439258	388373	318881	233601	205657	175711
Wall Type 2								
Cost difference from 10' to 12' Type 2 Exterior Walls	37512	33187	32406	31156	27300	20996	19173	16880
GCM Shell Components Cost - **12' Type 2 Wall**	770543	594300	527521	473239	393237	290786	257888	221683

Cost Schedules for the 2012 Reassessment

Commercial models specific for certain items but vague for others

Examples: Flooring is very specific, but partitions and lighting are very general ….. Commercial models to be reviewed and updated over the next year

MODEL	GCM Bank
Floor Height	14'
Finish Type	Finished divided, 12' ceiling height
Interior Finish and Mechanical Features	
Walls	Taped and painted drywall on wood or metal furring
Flooring	95% carpet and pad; 5% terrazzo or equal
Ceiling	Suspended acoustical tile
Partitions	Wood frame interior construction typical of occupancy
Lighting	Average cost installation typical of occupancy
HVAC	Zoned air conditioning warm and cooled air
Heating Only	Forced air
Cooling Additive	N/A
Plumbing	Not included

Cost Schedules for the 2012 Reassessment

Commercial models example – GCM Bank Use Type Finish - 1st floor

Base Floor Size	**16000**	**12500**	**10000**	**7500**	**5000**	**4100**	**3250**	**Cost**	
Perimeter Linear Feet	637	622	598	524	403	368	324		
Perimeter-Area Ratio (PAR)	**4**	**5**	**6**	**7**	**8**	**9**	**10**		
Type 1 Finished Divided Bank 14' wall									
GCM Shell Components Cost - **14' Type 1 Wall**	527550	461696	409517	337141	247481	218234	186715		
B2020 Commercial entrance - double door	4280	4280	4280	4280	4280	4280	4280	**4280.00**	ea
C1010 Walls - Painted drywall on metal furring	34169	33364	32077	28107	21617	19740	17379	4.47	per SF
C1010 Partitions @ 12% density, studs/drywall, painted	144115	112590	90072	67554	45036	36930	29273	75.06	per LF
C1019 Acoustical tile suspended ceiling	54240	42375	33900	25425	16950	13899	11018	3.39	per SF
C3020 Floor Finish Terrazzo, 5%	9440	7375	5900	4425	2950	2419	1918	11.80	per SF
Carpet and pad, 95%	44485	34754	27803	20853	13902	11399	9036	2.93	per SF
D5010 Electrical - full rate	158560	123875	99100	74325	49550	40631	32208	9.91	per SF
D30 HVAC - Heating and air conditioning	268000	209375	167500	125625	83750	68675	54438	16.75	per SF
Total builder cost	1244839	1029684	870149	687735	485516	416207	346265		
Builder markup + EOS factor + VEM	12448	10297	2610	1375	22334	28302	32549	-5%	
Total Replacement Cost New (RCN)	**1257287**	**1039981**	**872759**	**689110**	**507850**	**444509**	**378814**		
$ per SF	78.58	83.20	87.28	91.88	101.57	108.42	116.56	8.32	
Type 2 Finished Divided Bank 14' wall									
Total builder cost	1354315	1136569	972919	777780	554767	479456	401938		
Builder markup + EOS factor + VEM	13543	-5683	-6810	1556	25519	32603	37782	-5%	
Total Replacement Cost New (RCN)	**1367858**	**1130886**	**966109**	**779336**	**580286**	**512059**	**439720**		
$ per SF	85.49	90.47	96.61	103.91	116.06	124.89	135.30	10.44	

Cost Schedules for the 2012 Reassessment

Perimeter-to-Area Ratio (PAR) Summary for C/I Models

Perimeter to Area Ratio PAR	Approximate Cost Model Size Used for the PAR*		Approximate Smallest Feasible Size for the PAR**		Approximate Largest Feasible Size for the PAR**	
	Dimensions	SF Area	Dimensions	SF Area	Dimensions	SF Area
1: 0.5-1.4	400 x 400	160000	265 x 290	76700	800 x 800	640000
2: 1.5-2.4	200 x 200	40000	150 x 180	27000	165 x 800	132000
3: 2.5-3.4	88 x 272	24000	105 x 130	13650	90 x 800	72000
4: 3.5-4.4	62.5 x 256	16000	90 x 90	8100	60 x 800	48000
5: 4.5-5.4	47 x 264	12500	65 x 85	5525	45 x 800	36000
6: 5.5-6.4	38 x 261	10000	60 x 65	3900	35 x 800	28000
7: 6.5-7.4	33 x 229	7500	50 x 60	3000	30 x 800	24000
8: 7.5-8.4	29 x 172	5000	45 x 50	2250	25 x 800	20000
9: 8.5-9.4	26 x 158	4100	40 x 45	1800	25 x 440	11000
10: 9.5-10.4	23.4 x 139	3250	35 x 45	1575	25 x 130	3250

* All the actual cost model PARs are within 1% of each whole number PAR
** For buildings up to 800 x 800 feet in size

Cost Schedules for the 2012 Reassessment

Partition Density Assumptions for 2012 and 2002 GRM Models

GCM Use Type Partition Density	2012	2002	Type
Utility Storage	0.010	0.010	UF
Car Wash Auto	0.040	0.041	SF
Ice Rink	0.040	0.061	SF
Auto Service	0.040	0.039	SF
Auto Showroom	0.045	0.045	FO
Bowling Alley	0.037	0.037	FO
Theaters	0.050	0.111	FO
Health Club	0.090	0.295	FO
General Retail	0.040	0.042	FO
Discount	0.040	0.076	FO
Regional Shopping Ctr stores	0.040	0.047	FO
Neighborhood Shopping Ctr	0.042	0.042	FO
Department Store	0.060	0.125	FO
Supermarket	0.060	0.135	FO
Convenience Market	0.060	0.088	FO
Dining/Lounge	0.060	0.253	FO
Hotel-Motel Service	0.120	0.275	FD
Bank	0.120	0.406	FD
General Office	0.120	0.202	FD
Medical Office	0.180	0.321	FD
Country Club	0.120	0.283	FD
Funeral Home	0.120	0.258	FD
Nursing Home	0.160	0.356	FD
Hotel-motel	0.160	0.392	FD
Apartment	0.173	0.159	FD

Cost Schedules for the 2012 Reassessment

Accounting for Economies of Scale

- When more units of something are produced, it costs less to produce each unit.
- Economic efficiencies result from carrying out a process such as building construction on a larger and larger scale.

"Every estimator knows that as quantity built increases, the unit cost decreases … when comparison projects are either much larger or much smaller than the proposed project, adjustments need to be made for the economy of scale," wrote John D. Bledsoe (2002, p. 14), PhD, PE, author of the reference book *Successful Estimating Methods . . . from Concept to Bid*.

- The economies of scale size adjustment incorporated in the 2012 Indiana cost tables based upon Bledsoe (1992) and those found in Means (2012) tables are nearly identical.
- According to Bledsoe, when building sizes are within 10% of one another, there is little difference for which a size factor cost multiplier is needed; however, when sizes differ significantly (more than 10%) a cost adjustment multiplier is required for accurate estimates.

Cost Schedules for the 2012 Reassessment

Factors Contributing to Economies of Scale in Construction

Some of the inputs that a building contractor controls in a larger construction project that contribute to economies of scale:

- *Lower material costs:* When a builder buys materials in bulk for larger jobs - for example, concrete, plywood, or steel – the builder can take advantage of volume discounts
- *Specialized equipment:* As the scale of a construction project increases, a builder can employ the use of specialized labor and equipment resulting in greater efficiency – Example D4 tractor in slab construction
- *Learning curve effect:* Each new commercial building construction project is unique with a new set of plans and requirements. The learning curve effect refers to the capability of workers to improve their productivity by regularly repeating the same type of action. The increased productivity is achieved through practice, self-perfection and minor innovations resulting in a reduction in the number of work-hours necessary to achieve a specified amount of output

An economies of scale adjustment was applied in producing residential as well as commercial and industrial cost tables

Cost Schedules for the 2012 Reassessment

Economies of Scale Cost Adjustments Used for Each PAR

Perimeter to Area Ratio	Cost Model Size Used for the PAR		Comparing PAR Size to 12500 SF	
PAR	Dimensions	SF Area	Size Factor	Cost Multiplier
1: 0.5-1.4	400 x 400	160000	12.80	0.870
2: 1.5-2.4	200 x 200	40000	3.20	0.890
3: 2.5-3.4	88 x 272	24000	1.92	0.937
4: 3.5-4.4	62.5 x 256	16000	1.28	0.976
5: 4.5-5.4	47 x 264	12500	1.00	1.000
6: 5.5-6.4	38 x 261	10000	0.80	1.023
7: 6.5-7.4	33 x 229	7500	0.60	1.052
8: 7.5-8.4	29 x 172	5000	0.40	1.096
9: 8.5-9.4	26 x 158	4100	0.33	1.118
10: 9.5-10.4	23.4 x 139	3250	0.26	1.144

Cost Schedules for the 2012 Reassessment

2012 Commercial/Industrial Cost Table Changes from 2002

All ***First Floor Uses***, Economies of Scale Base = 12,500, VEM -30%

A.1 GCM PAR -->	1	2	3	4	5	6	7	8	9	10	+1
Mean	14%	19%	27%	35%	40%	45%	51%	61%	66%	72%	279%
Std Dev	10%	10%	11%	13%	14%	15%	17%	20%	23%	26%	451%
Median	13%	19%	28%	36%	40%	46%	53%	62%	65%	70%	194%
Min	1%	5%	8%	11%	13%	18%	24%	31%	33%	37%	107%
Max	38%	43%	52%	63%	77%	96%	117%	148%	168%	194%	2827%

A.2 GCI PAR -->	1	2	3	4	5	6	7	8	9	10	+1
Mean	11%	20%	30%	40%	47%	54%	63%	75%	81%	90%	280%
Std Dev	9%	10%	13%	16%	18%	20%	22%	24%	25%	27%	103%
Median	10%	19%	30%	41%	49%	57%	65%	77%	82%	89%	254%
Min	-1%	4%	5%	5%	6%	10%	15%	20%	25%	32%	151%
Max	33%	42%	61%	79%	92%	107%	121%	142%	153%	168%	592%

A.3 GCR PAR -->	1	2	3	4	5	6	7	8	9	10	+1
Mean	7%	12%	19%	24%	29%	34%	40%	49%	53%	59%	163%
Std Dev	7%	8%	9%	11%	13%	13%	13%	14%	14%	15%	30%
Median	8%	13%	20%	23%	28%	33%	39%	48%	53%	59%	157%
Min	-8%	-5%	-3%	-1%	1%	5%	10%	17%	21%	25%	127%
Max	16%	23%	33%	41%	47%	52%	59%	69%	74%	79%	220%

Cost Schedules for the 2012 Reassessment

Economic Conditions, Labor Rates, and Local Modifiers

- All of the national cost publishers (M&S, RS Means, Craftsman) did poorly in estimating the level of local costs for the Indianapolis area during the recent turbulent real estate market and major recession – they are 21-40% high
- Also note the difference in CODs from the same basic Craftsman cost data – the **Cost Model** used with the data is the reason for the differences

Summary of Findings	Median Sales Ratio (Median)			Coefficient of Dispersion (COD)		
13 1-story & 15 2-story model homes from 4 builders	1-story	2--story	Combined	1-story	2--story	Combined
Final Model Estimates from Craftsman NCE	1.02	1.09	1.06	3.84	4.08	4.75
2011 Marshall & Swift Residential Cost Handbook	1.18	1.31	1.21	4.44	4.68	6.78
2011 Craftsman NBC Manual Estimates	1.23	1.40	1.26	4.30	5.11	7.30
2011 R.S. Means Residential Cost Data	1.21	1.31	1.32	3.88	3.35	4.73
Initial Model Estimates from Craftsman NCE	1.30	1.40	1.36	4.25	4.20	4.99

Cost Schedules for the 2012 Reassessment

Verified Economic Modifier (VEM)

- Unit costs published by Craftsman in the 2011 National Cost Estimator (NCE) provide the cost components of labor, material, and equipment. Overhead and profit are accounted for by adding a 25% markup to the total.
- Craftsman and R.S. Means published costs show the cost component details, but Marshall & Swift does not. Craftsman labor rates were compared to the construction industry 2010 labor rates gathered by the Indiana Department of Labor for Marion County and found to be much too high for the local market.
- According to the most recent Bureau of Labor Statistics data, construction industry unemployment in June 2011 was 70% higher than the national unemployment rate. Turbulent real estate prices and a depressed construction industry with high unemployment have made it very difficult for national cost publishers to estimate the labor component of local construction costs.
- To survive in very difficult times, healthy Indiana construction companies are doing projects with no profit and substantially reducing their overhead expenses; less healthy companies are failing.
- Based upon verified local data, the Department is using a VEM of -30%

Cost Schedules for the 2012 Reassessment

Confirmation of the Selected -30% VEM

- Residential testing against actual local market prices included the VEM
  - Testing against new construction market prices from local home builders
    - Median ratio of 1.06 with VEM applied
    - Coefficient of Dispersion (COD) of 4.75
  - Testing against 2009 & 2010 verified sales in Johnson & Allen Counties
    - RCN median ratio of 1.14 with VEM applied for Johnson Co homes built 2001-2010
    - RCN median ratio of 1.09 with VEM applied for Allen Co homes built 2001-2010
- Commercial testing of GCR apartment costs against residential costs:

Size (sq. ft.)	2012 Costs - Residential	PAR	2012 Costs - GCR Apartment	Difference
1000	69.80	13	88.75	27%
1300	62.92	12	80.07	27%
1800	55.94	11	72.47	30%
3200	50.66	10	65.04	28%
4000	49.08	9	60.67	24%
5000	47.90	8	57.07	19%
7500	46.33	7	51.81	12%
10000	45.55	6	48.22	6%

Cost Schedules for the 2012 Reassessment

New Cost Models & Schedules

- Impact on the 2012 Reassessment
  - Costs are now more accurate and current
  - With cost schedule up 25%, how much will assessed values change?
  - Impact of compliance with 50 IAC 27
  - Impact on characteristics data & collection
    - Half story vs. Attic – they are different - important to use base size
    - Attached vs. Integral Garages – about the same cost result
    - Grades & possible grade creep because of using outdated costs
    - Commercial interior partitions and past partition adjustments
- Impact on computer software
  - Table structure did not change – only table rates changed
  - Therefore, there should be no need to change software
  - Benchmark size points are highlighted in Appendix C, Schedule A
  - Software may interpolate between size points if desired

Cost Schedules for the 2012 Reassessment

CONCLUSION

- Cost tables for use in the 2012 reassessment that differ from previous tables in a number of ways:
  - the underlying property models were updated to reflect current building design
  - the Department included economies of scale to account for size variations
  - the Department brought the national cost estimates in line with the Indiana real estate market and construction industry through the application of an empirically-derived Verified Economic Modifier (VEM)
- **These updates create a need for assessors to review and potentially revise market factors, schedule C adjustments, effective age, obsolescence, and any other factor that was used to bring the previous replacement cost new in line with market value-in-use**
- The resulting cost tables are expected to produce more accurate RCN (replacement cost new) estimates for properties and allow assessors to produce a market value-in-use for a property that requires fewer market and property-factor adjustments

Cost Schedules for the 2012 Reassessment

Other Information

- Tables were field tested prior to distribution
- Tables were revised based upon assessor and vendor review/feedback
- Delivery schedule of the 2012 cost tables:
  - Appendix C: Draft was distributed in early May; Final revised release was July 1, 2011
  - Appendix G: Draft was distributed July 1, 2011; Final revised release was August 2011
- Next planned cost table update on or about October 1, 2012 for use with assessments effective March 1, 2013 for taxes paid in 2014
- Cost table guidance/information was provided in June 2010:
  - See http://www.in.gov/dlgf/files/100621_-_Wood_Memo_-_2012_General_Reassessment_Cost_Information.pdf
- **QUESTIONS?**

Contact the Department of Local Government Finance

- *Terry Knee*
  - Telephone: 317-519-1809
  - Fax: 317.232.8779
  - E-mail: Tknee@dlgf.in.gov
- Web site: www.in.gov/dlgf
  - "Contact Us": www.in.gov/dlgf/2338.htm

- *Wayne Moore*
  - Telephone: 937.408.7342
  - Fax: 937.390.0936
  - E-mail: jwayne.moore@gmail.com
- Web site: www.jwaynemoore.net