2011 Winter Assessor Conference

Cost Schedules for the 2012 Reassessment

Terry Knee, DLGF Field Supervisor

J. Wayne Moore, Ph.D.

January 19-20, 2011

Cost Schedules for the 2012 Reassessment

- Why are new cost schedules needed?
  - 2002 cost schedules were based on 1999 costs
  - Construction costs have increased more than 50%
  - Original Guidelines (Manual) was written 35 years ago
  - Construction methods, design, materials have changed
  - Cost model assumptions need review & update

Cost Schedules for the 2012 Reassessment

- What methods existed for updating?
  - Have the work done by a contractor
    - Marshall & Swift
    - Appraisal Company (ARC was used last time)
    - Other sources
  - Do the work in-house at DLGF
- What goals were set for doing the update?
    - Minimize the cost
    - No change in data collection requirements
    - Retain existing format to minimize software impact
    - Develop an in-house annual update capacity if possible

Cost Schedules for the 2012 Reassessment

- What method was selected?
  - Do the work in-house at DLGF
    - Best potential to control & minimize cost
    - Best potential for minimizing software impact
    - Best potential for developing annual cost update capacity
- What process was used?
    - 1st – Issue RFP to obtain the right to use cost publisher's data
    - 2nd – Issue RFP to obtain technical assistance & training
    - 3rd – Create a cost update project team
      - Barry Wood, Terry Knee, David Schwab, & selected technical advisor

Cost Schedules for the 2012 Reassessment

- What vendors were selected?
  - Cost publisher: Craftsman Book Company
    - Publishes books used by building cost estimators (contractors)
    - Has published cost books nationally for more than 50 years
    - Offered to allow use of their data
      - At DLGF and on computer systems in all 92 Indiana counties
      - One flat annual royalty fee for use throughout the entire state
  - Technical assistance: J Wayne Moore Ph.D., LLC
    - Has worked with CAMA systems & cost schedules 37 years
    - Has presented & published papers on cost models at IAAO
    - Is very familiar with CAMA software used in Indiana

Cost Schedules for the 2012 Reassessment

- If Indiana's assessment standard is "market-value-in-use", why are cost schedules needed?
  - Construction cost provides the foundation from which sales calibration analysis and adjustments begin
  - Cost of construction is understandable to most people
  - New research* on using parcel x-y location coordinates has found that accurate replacement cost new (RCN) is an important variable for improving model results in Geographic Attribute Weighted Regression, a technique that is yielding the best house price estimates

* Moore & Myers (2010) *Journal of Property Tax Assessment & Administration • Volume 6, Issue 3*

Cost Schedules for the 2012 Reassessment

Using Geographic-Attribute Weighted Regression (GWR/GAWR) for CAMA Modeling

Journal of Property Tax Assessment & Administration • Volume 6, Issue 3 (December 2010)

- "A significant finding of this study was the benefit of using ***replacement cost new*** (RCN) as an independent variable in the GWR/GAWR modeling methodology, which resulted in a visible improvement in the COD results, but not a statistically significant one. The significance of this finding lies in the fact that inclusion of RCN allows the methodology to be explained in terms that are understandable to nearly everyone. RCN provides the foundation of the market value estimate for the subject property based on its structural characteristics while GWR/GAWR analyzes nearby comparable sales and adjusts the RCN according to market and location influences, producing an accurate and equitable estimate of the subject's market value. In essence, it is a comparable sales method used to calibrate the RCN and land value estimate" (p. 25).

Cost Schedules for the 2012 Reassessment

- Exactly what is replacement cost new (RCN)?

  Definition: Replacement cost new (RCN) *is the cost, including material, labor, and overhead, that would be incurred in constructing an improvement having the same utility to its owner as a subject improvement, without necessarily reproducing exactly any particular characteristics of the subject* (IAAO 1997, p. 120).

- Fact: Residential design, materials, and construction methods have undergone much change during the past few years
- Hence, a replacement structure will likely be different in design and materials from the original

Cost Schedules for the 2012 Reassessment

- What is a "Cost Model" and why is it needed?
- Building material and labor costs are tracked by specialized publishers for commercial use by insurance companies and the construction industry, as well as appraisers
- Contractors use the published cost data for creating ***detailed*** cost estimates from building plans
- Appraisers need a ***cost approach estimating model*** that gives the best trade-off between *accuracy* and *time invested*
- The ***same*** building material and labor cost data can give different estimating accuracy, depending upon the ***cost model used***

Cost Schedules for the 2012 Reassessment

Examples of Cost Estimating Model Differences

(Moore: 1995 IAAO Conference Presentation, "Stratified Cost Approach", p 228)

	Cost Table Organization			Quality Adjustment	
Cost Manual	Styles	Floor Level	Size	Separate Table	Multiplier
A. Marshall & Swift Residential Cost Handbook	X		X	X	
B. Iowa & Illinois Manuals*	X		X		X
C. Missouri/Hunnicutt			X		X
D. Oregon Manual		X	X	X	
E. Indiana Manual		X	X		X

* Most other cost manuals published by mass appraisal firms use method B.

Figure 2. Traditional methods of Cost Manual Unit Comparisons

Cost Schedules for the 2012 Reassessment

Accurate Cost Model Assumptions Are Needed

- All "models" attempt to simulate the real world
  - Models require assumptions
  - A "typical" structure must be defined by RCN model assumptions
  - Residential construction design and methods have changed
  - Most original cost approach model assumptions are not available
- Therefore, first step was to define assumptions

Cost Schedules for the 2012 Reassessment

What are the typical house floor sizes?

	Typical County Residential Descriptive Statistics - Floor Size Comparison by Grade Increment - Age < 10 yrs											
Total	1 Story				2 Story - 1st Floor				2 Story - 2nd Floor			
3979	C - 1	C	C + 1	C + 2	C - 1	C	C + 1	C + 2	C - 1	C	C + 1	C + 2
Count	217	405	393	277	611	904	873	299	611	904	873	299
Mean	1434	1499	1504	1643	1052	1010	1300	1239	1392	1232	1542	1314
Median	1410	1454	1432	1505	1024	968	1304	1176	1354	1204	1522	1272
Mode	1510	1252	1264	1264	974	654	1606	557	1191	517	2002	none
Min	911	824	915	1030	557	557	557	557	480	64	225	56
Max	2962	3158	2812	3325	1850	2035	2186	3047	2159	2339	2770	2288
Range	2051	2334	1897	2295	1293	1478	1629	2490	1679	2275	2545	2232
	Percentile				Percentile				Percentile			
99	2458	2670	2730	3056	1702	1750	2096	2260	2096	2039	2496	2272
95	1875	2080	2163	2469	1588	1600	1925	1911	1970	1935	2377	2032
90	1814	1912	1946	2287	1500	1506	1782	1648	1820	1787	2189	1911
85	1753	1796	1819	2137	1347	1364	1744	1585	1704	1681	2150	1810
80	1592	1722	1765	2050	1313	1322	1656	1547	1657	1598	2002	1693
75	1542	1691	1705	1955	1250	1249	1606	1473	1610	1518	2002	1600
70	1510	1632	1623	1809	1216	1208	1606	1424	1537	1407	1861	1566
65	1510	1577	1541	1700	1151	1147	1493	1347	1506	1354	1717	1488
60	1510	1522	1496	1620	1117	1064	1428	1300	1461	1303	1636	1404
55	1476	1505	1457	1549	1062	989	1347	1256	1405	1250	1602	1326
50	***1410***	***1454***	***1432***	***1505***	***1024***	***968***	***1304***	***1176***	***1354***	***1204***	***1522***	***1272***
45	1358	1423	1408	1458	974	927	1227	1140	1316	1190	1400	1224
40	1317	1371	1327	1419	940	864	1158	1081	1253	1142	1335	1195
35	1275	1323	1285	1386	876	812	1095	1039	1211	1088	1259	1140
30	1262	1278	1264	1327	851	767	1029	1022	1210	1020	1197	1092
25	1237	1252	1253	1264	825	706	974	1000	1191	951	1186	1020
20	1199	1230	1239	1264	806	663	927	968	1140	937	1126	961
15	1198	1207	1214	1240	746	654	860	918	1086	755	1080	926
10	1130	1183	1198	1212	706	654	805	816	1082	732	955	823
5	1066	1071	1170	1202	627	629	706	756	948	517	813	643
1	971	936	978	1096	557	557	557	557	669	504	374	280

Notice that 90% of the floor sizes are in the range of 600-2000 square feet

Cost Schedules for the 2012 Reassessment

- Model assumptions formed from real world observation
- Benchmark house sizes to fit data and span Schedule A:

  100 400 600 800 1000 1200 1300 1400 1500 1600 1800 2400 3200 4000 5000
- From 2010 new house floor plans, we determined construction characteristics for each floor level:
  - Average perimeter linear feet at each benchmark house size
  - Average linear feet of interior walls at each benchmark house size
  - Number of single window equivalents at each benchmark house size
  - Number of exterior and interior doors at each benchmark house size
  - Average linear feet of attached garage common wall
  - Typical roof pitch for each house type:
    - One story, two story, part upper floor (½ & ¾ story), attic level

Cost Schedules for the 2012 Reassessment

- Residential cost model assumptions based upon an analysis of 269 modern floor plans:
  - 91 one story house plans including 13 from major Indianapolis home builders
  - 70 two story first floor plans including 16 from major Indianapolis home builders
  - 73 two story second floor plans including 16 from Indianapolis home builders
  - 35 half & three-quarter story upper level floor plans from the national house plan database

Cost Schedules for the 2012 Reassessment

Cost Model Data Collection

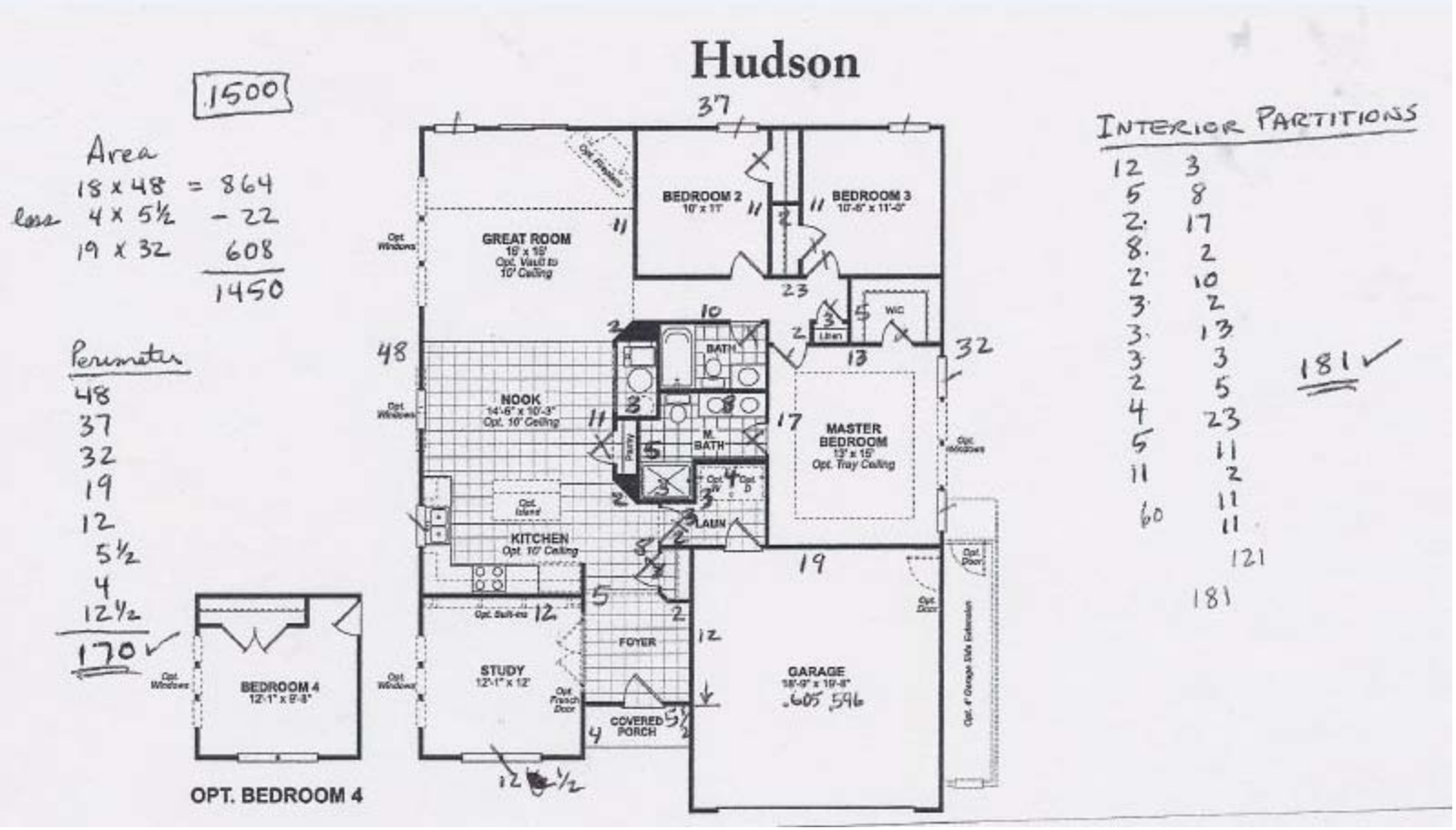

Cost Schedules for the 2012 Reassessment

Cost Model Data Collection

- House plans were clustered at model benchmark sizes

100 400 600 800 1000 1200 1300 1400 1500 1600 1800 2400 3200 4000 5000

- Characteristics of each plan determined (perimeter, etc.)

- Measurements gathered in spreadsheets by house type and benchmark house size (see example)

Cost Schedules for the 2012 Reassessment

Summarizing House Plan Data in Excel

A	B	C	D	E	F	G	H	I	J	K	L	M	N	O	P	Q	R	S	T	U
				CONSTRUCTION STATISTICS FOR ONE STORY RANCH STYLE HOMES								1200	SQ FT							
	1200SF						Windows							Doors - Entrance plus	Single		Roof	Gable		
#	Total SF	Ratio	Perim	Interior	Ratio	Single	Double	Triple	Total		Std Exterior	French Ext	Sliding	Std Interior	BiFold*		Pitch	Ends	Ct	Avg
1	1184	0.15	183	143	0.78	9	1	0	11		1	0	1	9	6		6	45-45	2	45
2	1200	0.12	144	147	1.02	1	4	1	12		1	0	1	6	8		6	28-28-22	3	26
3	1198	0.13	150	150	1.00	8	1	0	10		1	0	1	9	1		7	28-22-12	3	22
4	1200	0.12	140	120	0.86	5	2	1	12		1	0	0	6	2		6	30-30	2	30
5	1196	0.12	147	154	1.05	5	1	0	7		2	0	0	7	4		7	28-28	2	28
6	1200	0.12	139	124	0.89	3	0	0	3		0	2	0	6	6		8	32-32	2	32
7	1198	0.14	162.5	132	0.81	7	0	0	7		1	1	0	10	0		7	20-20-20	3	20
8	1200	0.12	146	141	0.97	6	1	0	8		2	0	0	8	5		6	30-30-18	3	26
9	1197	0.12	141.5	129	0.91	3	6	0	15		2	0	0	9	3		5	Hip		
10	1200	0.12	145	168	1.16	2	5	0	12		1	0	0	4	5		5	24-30-30	3	28
11																				
avg	**1197.3**	**0.13**	**149.8**	**140.8**	**0.94**	**4.90**	**2.10**	**0.20**	**9.70**		**1.20**	**0.30**	**0.30**	**7.40**	**4.00**		**6.30**		**2.56**	**28.6**
	1200		150	142																
med	**1199.0**	**0.12**	**145.5**	**142.0**	**0.94**	**5.00**	**1.00**	**0.00**	**10.50**		**1.00**	**0.00**	**0.00**	**7.50**	**4.50**		**6.00**		**3.00**	**28.0**
	1200		146	137																
															* or sliding					

600SF | 800SF | 1000SF | **1200SF** | 1300SF | 1400SF | 1500SF | 1600SF | 1800SF | 2400SF | 3200SF | 4000SF

Cost Schedules for the 2012 Reassessment

New Cost Model Creation Steps

- Place Cost Model Assumptions in the benchmark model size calculation worksheet
- Organize cost information in Excel using UNIFORMAT II
- Place elemental component and assembly unit costs in spreadsheet
- Calculate building costs at benchmark square foot building sizes

Cost Schedules for the 2012 Reassessment

Benchmark model calculation worksheet by size

Cost Source: Craftsman Book Co	INDIANA 2011 REPLACEMENT COST NEW (RCN) MODEL WORKSHEET														12/1/2010
2011 National Construction Estimator	Average Quality 'C' Class - "Standard or Normal Construction"														
	COST MODEL ASSUMPTIONS														
ITEM															
Base Floor Size	100	400	600	800	1000	1200	1300	1400	1500	1600	1800	2400	3200	4000	5000
Half Upper Floor Usable SF @ 59% of Base	59	236	354	472	590	708	767	826	885	944	1062	1416	1888	2360	2950
3/4 Upper Floor Usable SF @ 78% of Base	78	312	468	624	780	936	1014	1092	1170	1248	1404	1872	2496	3120	3900
Attic Usable SF @ 40% of Base	40	160	240	320	400	480	520	560	600	640	720	960	1280	1600	2000
Perimeter Linear Feet	50	82	106	120	137	156	165	170	178	186	204	234	303	360	425
One Story Perimeter LF shared with Att Garage	20	20	24	27	27	27	27	27	27	27	27	27	27	27	27
Two Story Perimeter LF shared with Att Garage	20	20	22	25	32	32	32	32	32	32	32	32	32	32	32
Average Gable End Width	8	16	24	27	29	30	32	32	32	33	35	36	38	40	40
Number of gable Ends	2	2	2	2.5	2.5	2.5	2.5	2.5	2.5	2.5	2.5	2.5	2.5	3	4
Standard Roof Pitch	6	6	6	6	6	6	6	6	6	6	6	6	6	6	6
Half Story Roof Pitch with dormer factor	9	9	9	9	9	9	9	9	9	9	9	9	9	9	9
Attic Roof Pitch - no dormers	7	7	7	7	7	7	7	7	7	7	7	7	7	7	7
Standard Gable End Wall Area (pitch=6)	16	64	144	228	263	281	320	320	320	340	383	405	451	600	800
Gable End Wall Area for 1/2 Story (pitch=9)	24	96	216	342	394	422	480	480	480	510	574	608	677	900	1200
Gable End Wall Area for Attic (pitch=7)	19	75	168	266	307	328	373	373	373	397	447	473	526	700	933
Standard Pitch Roof Area (with overhang)	112	448	672	896	1120	1344	1456	1568	1680	1792	2016	2688	3584	4480	5600
Roof Area for 1/2 Story Pitch (with overhang)	126	504	756	1008	1260	1512	1638	1764	1890	2016	2268	3024	4032	5040	6300
Roof Area for Attic Story Pitch (with overhang)	116	464	696	928	1160	1392	1508	1624	1740	1856	2088	2784	3712	4640	5800
Dormer Linear Feet to Base Size Factor	0.0250	0.0152	0.0133	0.0117	0.0108	0.0093	0.0082	0.0077	0.0073	0.0069	0.0062	0.0050	0.0047	0.0045	0.0043
Linear Feet of Dormer for Half Story	3	6	8	9	11	11	11	11	11	11	11	12	15	18	22
One Story Home Interior Partitions LF	12	47	71	94	118	142	154	165	177	188	212	282	366	450	560
1st Floor Interior Partitions of Two Story Home	8	32	48	64	80	96	104	112	120	130	148	196	262	330	416
Interior Partition LF Adjust of Two Story Home	(4)	(15)	(23)	(30)	(38)	(46)	(50)	(53)	(57)	(58)	(64)	(86)	(104)	(120)	(144)
Full Upper Floor Interior Partitions LF	18	68	98	126	150	176	188	192	204	216	242	316	410	504	620
Half Story Interior Partitions LF	19	71	103	132	138	151	165	178	190	201	220	245	318	391	481
Attic Interior Partitons LF @ 50% of Half Story	10	36	52	66	69	76	83	89	95	101	110	123	159	196	241
Exterior Doors Excluding Main Entrance	1	1	1	1	2	2	2	2	2	2	2	2	2	3	4
Std Interior Doors of One Story Homes	1	3	4	6	8	9	11	11	11	12	12	14	16	22	30
1st Floor Std Interior Doors of Two Story Homes	1	2	3	4	5	5	5	6	6	7	7	9	12	16	20
Std Interior Door Adjust of Two Story Home	0	(1)	(1)	(2)	(3)	(4)	(6)	(5)	(5)	(5)	(5)	(5)	(4)	(6)	(10)
Full Upper Floor Std Interior Doors	2	4	6	8	10	10	10	10	10	12	14	16	18	21	24

Cost Schedules for the 2012 Reassessment

Closer look at Cost Model Assumptions: **Exterior Closure & Roof**

G18 =ROUND(G$13*((0.5*G$12*G15)/12)*0.5*G$12,0)

	A	D	E	F	G	H	I	J	K
1	**Cost Source: Craftsman Book Co**	**INDIANA 2011 REPLACEMENT COST NEW (RCN) MODEL WORKSHEET**							
2	**2011 National Construction Estimator**	**Average Quality 'C' Class - "Standard or Normal Construction"**							
3		***COST MODEL ASSUMPTIONS***							
4	**ITEM**								
5	**Base Floor Size**	**600**	**800**	**1000**	**1200**	**1300**	**1400**	**1500**	**1600**
6	Half Upper Floor Usable SF @ 59% of Base	354	472	590	708	767	826	885	944
7	3/4 Upper Floor Usable SF @ 78% of Base	468	624	780	936	1014	1092	1170	1248
8	Attic Usable SF @ 40% of Base	240	320	400	480	520	560	600	640
9	Perimeter Linear Feet	106	120	137	156	165	170	178	186
10	One Story Perimeter LF shared with Att Garage	24	27	27	27	27	27	27	27
11	Two Story Perimeter LF shared with Att Garage	22	25	32	32	32	32	32	32
12	Average Gable End Width	24	27	29	30	32	32	32	33
13	Number of gable Ends	2	2.5	2.5	2.5	2.5	2.5	2.5	2.5
14	Standard Roof Pitch	6	6	6	6	6	6	6	6
15	Half Story Roof Pitch with dormer factor	9	9	9	9	9	9	9	9
16	Attic Roof Pitch - no dormers	7	7	7	7	7	7	7	7
17	Standard Gable End Wall Area (pitch=6)	144	228	263	281	320	320	320	340
18	Gable End Wall Area for 1/2 Story (pitch=9)	216	342	394	422	480	480	480	510
19	Gable End Wall Area for Attic (pitch=7)	168	266	307	328	373	373	373	397
20	Standard Pitch Roof Area (with overhang)	672	896	1120	1344	1456	1568	1680	1792
21	Roof Area for 1/2 Story Pitch (with overhang)	756	1008	1260	1512	1638	1764	1890	2016
22	Roof Area for Attic Story Pitch (with overhang)	696	928	1160	1392	1508	1624	1740	1856

Cost Schedules for the 2012 Reassessment

Closer look at Cost Model Assumptions:

Part Upper Story

D41 | =AVERAGE($F4:$F27)

	A	B	C	D	E	F	G	H	I	J
1					PART UPPER STORY HOUSE PLAN DATA					
2			Base	Upper						
3	#	Ref	SF	SF	Type	Ratio				
4	1	1750p9	768	515	150	67.1%				
5	2	1750p5	864	528	150	61.1%				
6	3	1500p4	888	400	150	45.0%				
7	4	1750p8	960	537	150	55.9%				
8	5	2250p1	975	645	150	66.2%				
9	6	1750p2	982	561	150	57.1%				
10	7	1750p7	1020	483	150	47.4%				
11	8	2250p5	1054	651	150	61.8%				
12	9	1750p4	1072	537	150	50.1%				
13	10	2250p7	1080	677	150	62.7%				

39										
40	*All*	*1.50 Story SF % of Base*			***1.5s Base Area:***	**800**	**1000**	**1200**	**1600**	**1800up**
41		**Mean %**		**58.9%**		**57.7%**	**57.3%**	**53.7%**	**65.7%**	**63.4%**
42		**Median %**		**58.9%**		**61.1%**	**57.1%**	**57.0%**	**68.8%**	**61.4%**
43	*All*	*1.75 Story SF % of Base*			***Count:***	**3**	**7**	**5**	**4**	**3**
44		**Mean %**		**77.6%**						
45		**Median %**		**78.3%**						

Cost Schedules for the 2012 Reassessment

Closer look at Cost Model Assumptions:

Part Upper Story

I34 =AVERAGE(I$14:I$18)

	A	B	C	D	E	F	G	H	I	J	K	L	M	N	O
1							HALF STORY HOUSE PLAN DATA ANALYSIS								
2		Base	Upper		Base	Dormers		LF Ratio	LF Ratio		Nbr of	Nbr of	Nbr of	Int Part	Ratio to
3	#	SF	SF		Width	Nbr	LF	to Width	to BaseSF	Depth	Win	Doors	Bifold	LF	Upper SF
4	1	768	515		32	2	6.62	0.207	0.0086	4.40	2	9	0	134.5	0.261
5	2	864	528		32	2	14.00	0.438	0.0162	8.00	2	5	4	131.0	0.248
6	3	888	400		37	2	9.12	0.246	0.0103	5.32	1	7	0	132.0	0.330
7	4	960	537		30	2	9.50	0.317	0.0099	10.60	2	9	0	123.5	0.230
8	5	975	645		37.5	2	8.40	0.224	0.0086	7.50	2	4	2	161.0	0.250
9	6	982	561		29	3	11.10	0.383	0.0113	7.40	2	6	2	128.5	0.229
10	7	1020	483		34	3	15.00	0.441	0.0147	8.25	3	7	4	135.5	0.281
27	24	2400	1383		48	3	11.34	0.236	0.0047	8.00	2	10	0	223.0	0.161
28		Average for all:			**38**	**2.64**	**10.75**	**0.293**	**0.009**	**7.16**	**2.1**	**7.3**	**2.2**	**166.4**	**0.230**
29		Median for all:			**36**	**3.00**	**10.65**	**0.277**	**0.009**	**7.45**	**2.0**	**7.0**	**2.0**	**148.0**	**0.230**
30		*Single model dormer:*					***4.08***			***7.16***					
31		Size Group Analysis													
32			800		34	2.00	9.91	0.297	0.0117	5.91	1.7	7.0	1.3	132.5	0.280
33			1000		33	2.43	11.07	0.337	0.0108	7.83	2.0	6.6	2.6	138.0	0.238
34			1200		37	3.00	10.98	0.299	0.0093	6.78	1.8	6.6	2.4	151.3	0.240
35			1600		42	3.00	11.11	0.270	0.0069	6.57	3.0	6.5	3.5	201.0	0.191
36			1800up		48	2.67	9.98	0.207	0.0050	8.22	2.0	11.3	0.3	245.3	0.197

Cost Schedules for the 2012 Reassessment

Closer look at Cost Model Assumptions:
Dormers

G24 =ROUND(G23*G$5,0)

	A	D	E	F	G	H	I	J	K
1	**Cost Source: Craftsman Book Co**	**INDIANA 2011 REPLACEMENT COST NEW (RCN) MODEL WORKSHEET**							
2	**2011 National Construction Estimator**	**Average Quality 'C' Class - "Standard or Normal Construction"**							
3		***COST MODEL ASSUMPTIONS***							
4	**ITEM**								
5	**Base Floor Size**	**600**	**800**	**1000**	**1200**	**1300**	**1400**	**1500**	**1600**
22	Roof Area for Attic Story Pitch (with overhang)	696	928	1160	1392	1508	1624	1740	1856
23	Dormer Linear Feet to Base Size Factor	0.0133	0.0117	0.0108	0.0093	0.0082	0.0077	0.0073	0.0069
24	Linear Feet of Dormer for Half Story	8	9	11	11	11	11	11	11
25	One Story Home Interior Partitions LF	71	94	118	142	154	165	177	188
26	1st Floor Interior Partitions of Two Story Home	48	64	80	96	104	112	120	130
27	Interior Partition LF Adjust of Two Story Home	(23)	(30)	(38)	(46)	(50)	(53)	(57)	(58)
28	Full Upper Floor Interior Partitions LF	98	126	150	176	188	192	204	216
29	Half Story Interior Partitions LF	103	132	138	151	165	178	190	201
30	Attic Interior Partitons LF @ 50% of Half Story	52	66	69	76	83	89	95	101

Cost Schedules for the 2012 Reassessment

Closer look at Cost Model Assumptions: **Model Dormer**

Collected Dormer Statistics:

29	**Average for all:**	**38**	**2.64**	**10.75**	**0.293**	**0.009**	**7.16**
30	**Median for all:**	**36**	**3.00**	**10.65**	**0.277**	**0.009**	**7.45**
31	***Single model dormer:***			***4.08***			***7.16***

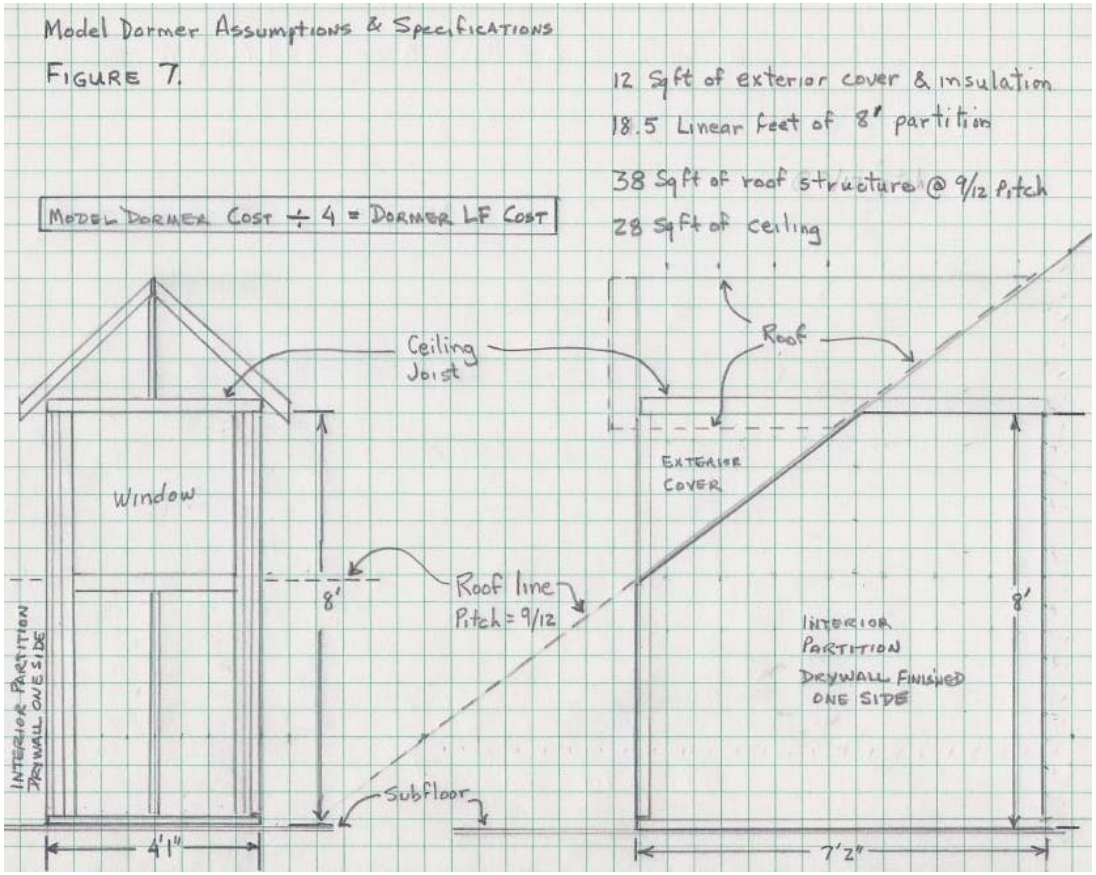

Cost Schedules for the 2012 Reassessment

Closer look at Cost Model Assumptions: **Part Upper Story Size**

Story Living Area Calculation from ANSI Z765-2003

The figure below illustrates a 28 by 42 foot house with part upper living area discussed in the ANSI house measurement standard **Commentary** section. Without dormers, the construction configuration described would allow a part upper story size of 525 square feet of living area on the upper level, which is 44.6% of the first floor living area (roof pitch is 7.7” per 12”).

AMERICAN NATIONAL STANDARD FOR SINGLE-FAMILY RESIDENTIAL BUILDINGS

FOR CALCULATING: ANSI Z765-2003

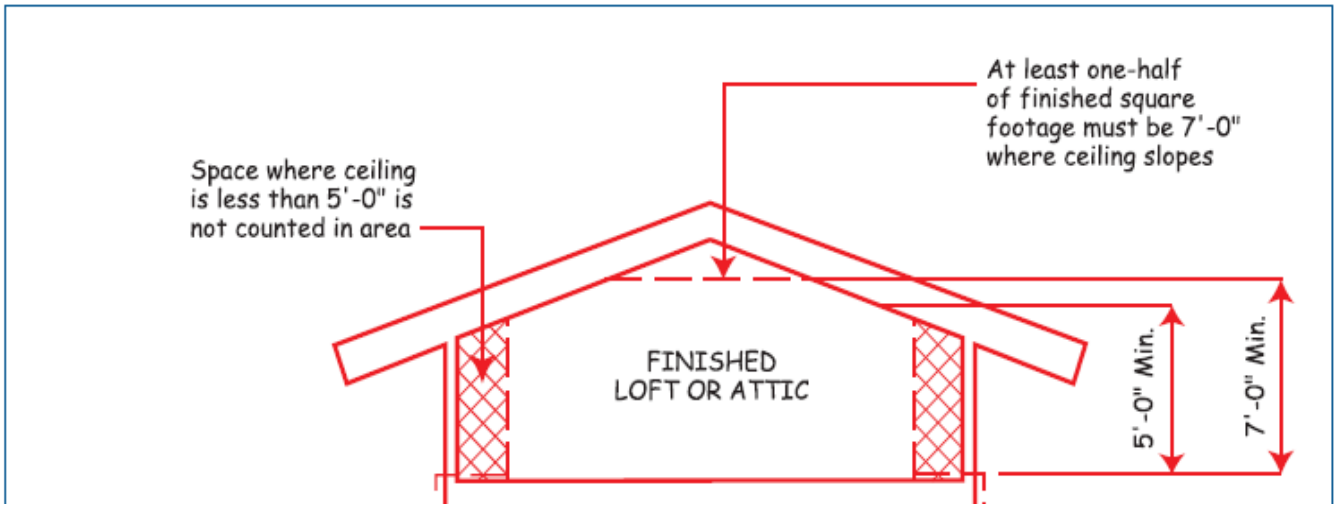

Cost Schedules for the 2012 Reassessment

Closer look at Cost Model Assumptions: **Roof Pitch**

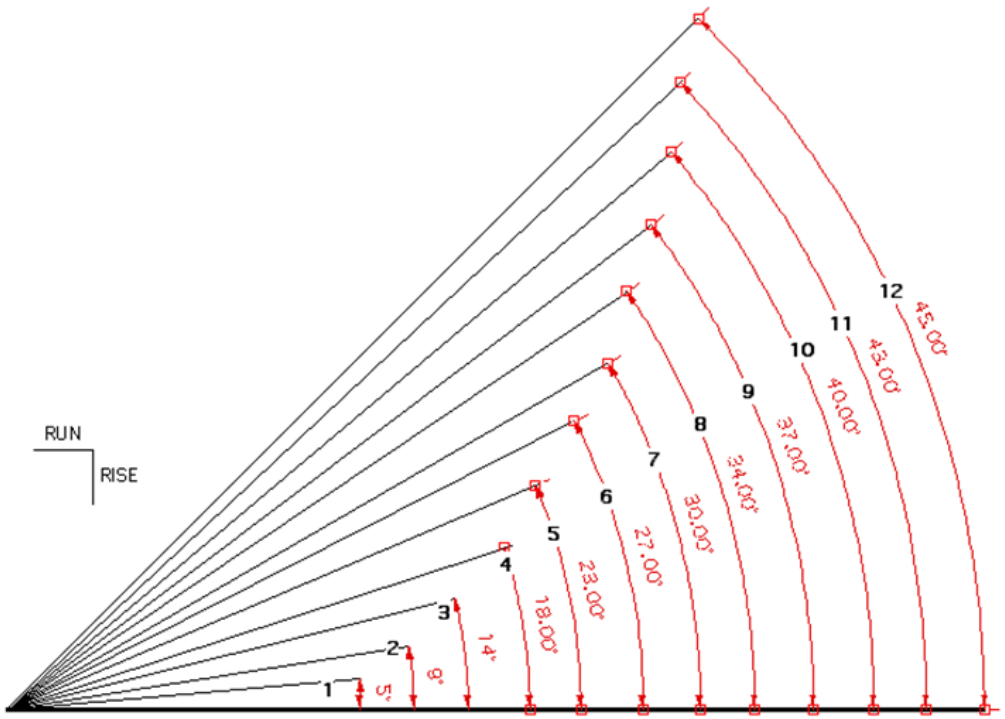

ROOF PITCH
is measured in inches of rise per foot of run.

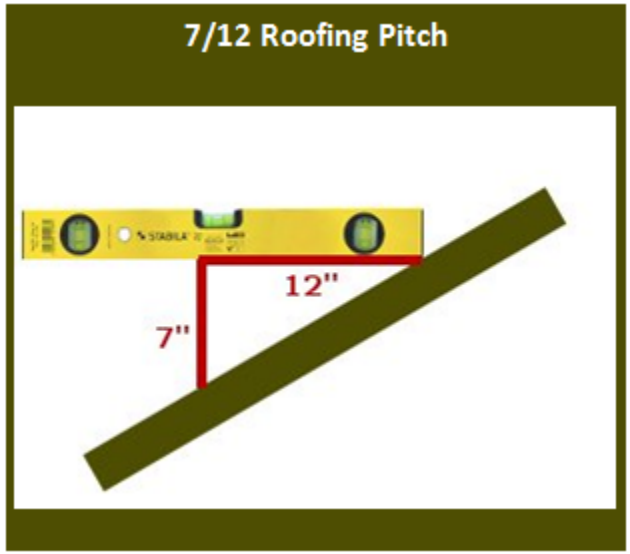

Cost Schedules for the 2012 Reassessment

Closer look at Cost Model Assumptions:
Roof Pitch & Usable Area

Empirical research conducted to establish cost model assumptions revealed that

- Standard roof pitch for one & two story houses with no upper level should be 6/12
- Roof pitch for attic upper level should be 7/12 giving usable area of 40% of the base area
- Roof pitch of half story level should be 9/12 giving usable area of 59% of the base area
- Three-quarter story is ½ full upper story and ½ half story with usable area of 78% of the base

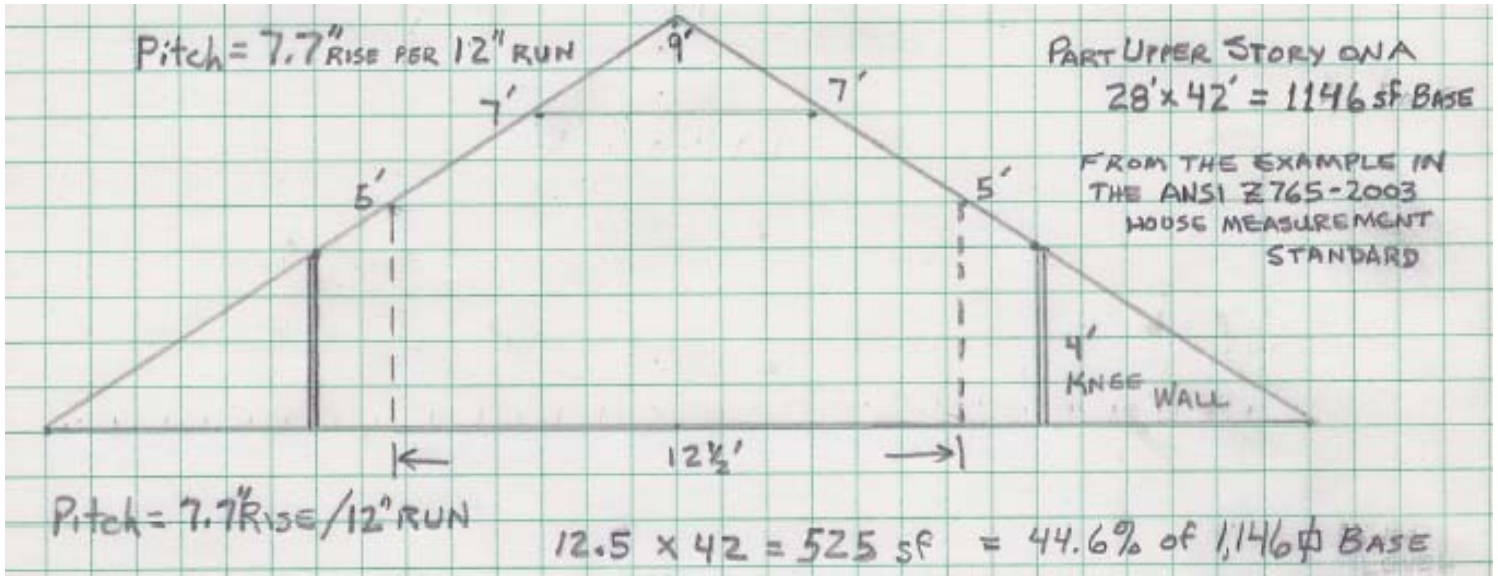

Cost Schedules for the 2012 Reassessment

Closer look at Cost Model Assumptions: **Part Upper Story Costs**

- How do the half story & attic cost model assumptions translate into cost schedules?
  - Roof pitch for attic upper level should be 7/12 giving usable area of 40% of the base area
  - Roof pitch of half story level should be 9/12 giving usable area of 59% of the base area
- Structural costs
  - Attic requires floor joists, subfloor, permanent stairway, and more roof material
  - Half story requires even more roof material, dormers, and a better stairway
  - Additional unfinished structure costs apply to the entire base area, say 1200 sqft
- Finished living area costs for part upper story levels
  - Attic: max of 40% relative to the base can be finished … ½ finished means 20%
    - "Full finished" means 480 sqft on a 1200 sqft base area, ½ finished means 240 sqft
    - If attic finish cost were $25/sqft, that is $12,000 for full finish and $6,000 for ½ finished
    - Spread over the 1200 sqft base, full finish adds $10 per sqft, ½ finished adds $5 per sqft
  - Half story: max of 59% relative to the base can be finished … ½ finished means 29.5%
    - "Full finished" means 708 sqft on a 1200 sqft base area, ½ finished means 354 sqft finished
    - If half story finish cost were $30/sqft, that is $21,240 for full finish and $10,620 for ½ finished
    - Spread over the 1200 sqft base, full finish adds $17.70 per sqft, ½ finished adds $8.85 per sqft

Cost Schedules for the 2012 Reassessment

Closer look at Cost Model Assumptions: **Interior Walls**

- Why is it important to know the LF of interior walls?
  - Interior walls are expensive to build
  - Modern floor plans use more of an "open design"
  - 1st floor of a 2-story home is different from a 1-story
  - Full upper story and part upper story are also different
  - Using 2010 partition assembly costs for 2x4 walls:
    - Partition wall assemblies cost $6.36 per sqft
    - This is $50.88 per LF for an 8' interior partition
    - Hence, accurate cost model estimates important

- Next slide shows interior wall assembly cost components

Cost Schedules for the 2012 Reassessment

2X4 INTERIOR PARTITION WALL ASSEMBLY, RESIDENTIAL RATES

Description	Craft@Hrs	Unit	Material	Labor	Total	Notes
Wall Framing Material						
2X4 HF Lumber (Delivered)	-	SF	0.44	-	$ 0.44	*1.12 BF Per SF of Wall*
16d Bright Nails	-	SF	0.04	-	$ 0.04	*20 Lbs Nails Per 1,000 SF Wall*
Wall Framing Labor						
Frame Wall, 16" On Center	B1@0.023	SF	-	0.77	$ 0.77	*Cont. Single Sole & Top Plates*
Drywall Material *Unit Prices Account For Both Sides of Wall*						
½" Gypsum Wallboard	-	SF	0.44	-	$ 0.44	*4X8 Sheets*
Joint Tape	-	SF	0.03	-	$ 0.03	*760 LF of Tape per 2,000 SF*
Joint Compound (1st & Skim Coat)	-	SF	0.45	-	$ 0.45	*.22 Lbs of Compound PSF Surface*
1 5/8" Drywall Screws	-	SF	0.10	-	$ 0.10	*12 Lbs of Screws Per 2,000 SF*
Drywall Labor *Unit Prices Account For Both Sides of Wall*						
Cut, Hang & Secure 1/2" GWB	DI@0.015	SF	-	0.53	$ 0.53	*Select Opening Cuts Included*
Apply Tape & Compound	PR@0.014	SF	-	0.52	$ 0.52	*.15 Lbs of Compound PSF*
Sand Joints	HC@0.009	SF	-	0.25	$ 0.25	*Level 4 Finish*
Apply Skim Coat	PR@0.012	SF	-	0.45	$ 0.45	*.07 Lbs of Compound PSF*
Finish Sanding	PR@0.014	SF	-	0.52	$ 0.52	*Level 4 Finish*
Prime/Paint Material *Unit Prices Account For Both Sides of Wall*						
Primer, Latex	-	SF	0.06	-	$ 0.06	*380 SF Coverage Per Gallon*
Paint, Latex	-	SF	0.10	-	$ 0.10	*430 SF Coverage Per Gallon*
Masking Tape	-	SF	0.02	-	$ 0.02	*500 LF of Tape Per 2,000 SF Wall*
Plastic Sheeting	-	SF	0.01	-	$ 0.01	
Prime/Paint Labor *Unit Prices Account For Both Sides of Wall*						
Mask/Cover Prep Work	PP@0.005	SF	-	0.17	$ 0.17	*Sheeting on Floor, Tape Transistions*
Prime, Rolled	PP@0.011	SF	-	0.37	$ 0.37	
Paint, Rolled, 1st Coat	PP@0.021	SF	-	0.70	$ 0.70	*With Cut-In at Ceiling Transition*
Paint, Rolled, 2nd Coat	PP@0.011	SF	-	0.37	$ 0.37	*With Cut-In at Ceiling Transition*
Touch Ups	PP@0.001	SF	-	0.02	$ 0.02	*Minor, With Brush*
TOTAL COST PER SQUARE FOOT OF WALL					**$ 6.36**	

Cost Schedules for the 2012 Reassessment

Closer look at Cost Model Assumptions: **Interior Walls**

G27 | fx =G26-G25

	A	D	E	F	G	H	I	J	K
1	**Cost Source: Craftsman Book Co**	**INDIANA 2011 REPLACEMENT COST NEW (RCN) MODEL WORKSHEET**							
2	**2011 National Construction Estimator**	**Average Quality 'C' Class - "Standard or Normal Construction"**							
3		***COST MODEL ASSUMPTIONS***							
4	**ITEM**								
5	**Base Floor Size**	**600**	**800**	**1000**	**1200**	**1300**	**1400**	**1500**	**1600**
22	Roof Area for Attic Story Pitch (with overhang)	696	928	1160	1392	1508	1624	1740	1856
23	Dormer Linear Feet to Base Size Factor	0.0133	0.0117	0.0108	0.0093	0.0082	0.0077	0.0073	0.0069
24	Linear Feet of Dormer for Half Story	8	9	11	11	11	11	11	11
25	One Story Home Interior Partitions LF	71	94	118	142	154	165	177	188
26	1st Floor Interior Partitions of Two Story Home	48	64	80	96	104	112	120	130
27	Interior Partition LF Adjust of Two Story Home	(23)	(30)	(38)	(46)	(50)	(53)	(57)	(58)
28	Full Upper Floor Interior Partitions LF	98	126	150	176	188	192	204	216
29	Half Story Interior Partitions LF	103	132	138	151	165	178	190	201
30	Attic Interior Partitons LF @ 50% of Half Story	52	66	69	76	83	89	95	101

Cost Schedules for the 2012 Reassessment

Closer look at Cost Model Assumptions: **Doors & Windows**

G34 | =G33-G32

	A	D	E	F	G	H	I	J	K
1	**Cost Source: Craftsman Book Co**	**INDIANA 2011 REPLACEMENT COST NEW (RCN) MODEL WORKSHEET**							
2	**2011 National Construction Estimator**	**Average Quality 'C' Class - "Standard or Normal Construction"**							
3		***COST MODEL ASSUMPTIONS***							
4	**ITEM**								
5	**Base Floor Size**	**600**	**800**	**1000**	**1200**	**1300**	**1400**	**1500**	**1600**
31	Exterior Doors Excluding Main Entrance	1	1	2	2	2	2	2	2
32	Std Interior Doors of One Story Homes	4	6	8	9	11	11	11	12
33	1st Floor Std Interior Doors of Two Story Homes	3	4	5	5	5	6	6	7
34	Std Interior Door Adjust of Two Story Home	(1)	(2)	(3)	(4)	(6)	(5)	(5)	(5)
35	Full Upper Floor Std Interior Doors	6	8	10	10	10	10	10	12
36	Half Story Std Interior Doors	5	7	7	7	7	7	7	7
37	Attic Std Interior Doors	4	4	4	4	4	4	4	4
38	Int Bi-fold or Sliding Doors -Any Floor ex-Attic	2	2	2	2	2	2	2	2
39	Single Window Equiv (SWE) of One Story Homes	5	8	9	10	10	10	10	10
40	1st Floor SWE of Two Story Homes	5	6	6	7	9	9	9	9
41	SWE Adjustment for Two Story Homes	0	(2)	(3)	(3)	(1)	(1)	(1)	(1)
42	Full Upper Floor Single Window Equivalents	6	6	6	6	7	8	8	8
43	Half Story/Attic Single Window Equivalents	2	2	2	2	2	2	2	2

Cost Schedules for the 2012 Reassessment

New Cost Model Creation Steps

- Place Cost Model Assumptions in the benchmark model size calculation worksheet (previous slides)

Following Slides:

- Organize information in Excel using UNIFORMAT II
- Place elemental component and assembly unit costs in spreadsheet
- Calculate building costs at benchmark square foot building sizes

Cost Schedules for the 2012 Reassessment

Organize information in Excel using UNIFORMAT II

Figure 1. ASTM UNIFORMAT II - Classification of Building Elements (E1557-97)

ASTM UNIFORMAT II - Classification of Building Elements (E1557-97)		
Level 1 Major Group Elements	**Level 2 Group Elements**	**Level 3 Individual Elements**
A. SUBSTRUCTURE	A10 Foundations	A1010 Standard Foundations A1020 Special Foundations A1030 Slab on Grade
	A20 Basement Construction	A2010 Basement Excavation A2020 Basement Walls

45	**UNIFORMAT II Computational Detail**
46	A. SUBSTRUCTURE
47	A10 Foundations
48	A1010 Standard Foundations
49	One Story Structure
50	1.5 or Two Story Structure
51	A1020 Special Foundations
52	A1030 Slab on Grade
53	A20 Basement Construction
54	A2010 Basement Excavation
55	A2020 Basement Walls

Cost Schedules for the 2012 Reassessment

Dwelling Foundation Cost Computation Example

Real Property Assessment Guide – Version A, Table A-3 Grade C, Page 10 (Referenced as "Table A-3")

Table A-3 Foundations: 8" poured concrete or 8" concrete block

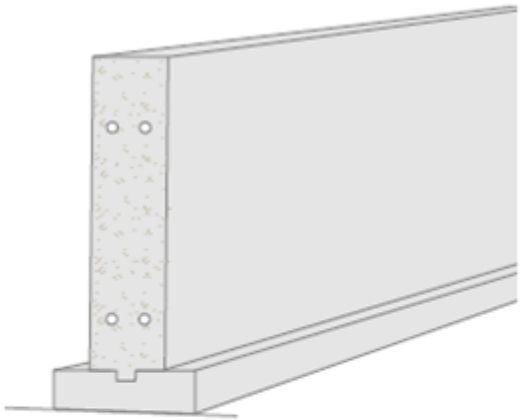

Footing with keyway

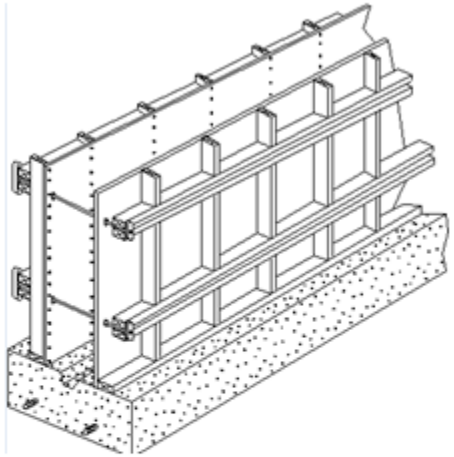

Forms for a poured concrete stem wall

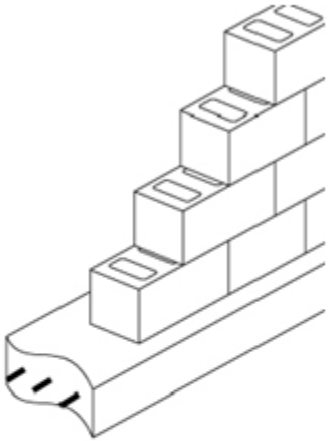

Concrete blocks on footing

A stem wall placed on a spread footing (or simply *footing*) has long been considered the standard foundation. The spread footing distributes the weight of the structure over a larger area. A residential footing is usually 18 inches wide and 8 inches deep. It's normally reinforced with two horizontal bars of #4 grade 60 or #5 grade 40 steel reinforcement. You attach the spread footing to the stem wall with a keyway and/or steel rebar dowel uprights (Diller & Diller, p 150, 159, NCE, p. 92-93).

Cost Schedules for the 2012 Reassessment

Applying the 2011 Craftsman Cost Data

Dwelling Foundation Cost Computation Example (Cont'd)

Craftsman Assembly: Continuous concrete footing with foundation stem wall. These figures assume the foundation stem wall projects 24" above the finished grade and extends into the soil 18" to the top of the footing. Costs shown include typical excavation using a 3/4 CY backhoe with excess backfill spread on site, forming both sides of the foundation wall and the footing, based on three uses of the forms and 2 #4 rebar. Use $1,200.00 as a minimum cost for this type work (NCE, p. 92).

2011 Costs	Craft@Hrs		Unit Material	Labor*	Equipment	Total
Typical cost per CY	B5@7.16	CY	156.00	254.00	50.90	463.90
Typical single story structure, footing 12" W x 8" D, wall 6" T x 42" D (.10 CY per LF)	B5@.716	LF	15.90	25.40	5.09	46.39
Typical two story structure, footing 18" W x 10" D, wall 8" T x 42" D (.14 CY per LF)	B5@1.00	LF	22.30	35.50	7.11	64.91
Typical three story structure, footing 24" W x 12" D, wall 10" T x 42" D (.19 CY per LF)	B5@1.36	LF	30.20	48.20	9.67	88.07

***Note: Labor costs for this assembly are down about 14% from 2010**

Cost Schedules for the 2012 Reassessment

Applying the 2011 Craftsman Cost Data

Dwelling Foundation Cost Computation Example (Cont'd)

5	**Base Floor Size**	**1000**	**1200**	**1300**	**1400**	**1500**	**1600**	**1800**	**2400**	**3200**	**4000**	**5000**
6	Half Upper Floor Usable SF @ 59% of Base	590	708	767	826	885	944	1062	1416	1888	2360	2950
7	3/4 Upper Floor Usable SF @ 78% of Base	780	936	1014	1092	1170	1248	1404	1872	2496	3120	3900
8	Attic Usable SF @ 40% of Base	400	480	520	560	600	640	720	960	1280	1600	2000
9	Perimeter Linear Feet	137	156	165	170	178	186	204	234	303	360	425

G49 =ROUND(G$9*$R49,0)

	A	F	G	H	I	J	K	L	M	N	O	P	Q	R
1	**Cost Source: Craftsman Book Co**	**1 REPLACEMENT COST NEW (RCN) MODEL WORKSHEET**										**12/1/2010**		
2	**2011 National Construction Estimator**	**e Quality 'C' Class - "Standard or Normal Construction"**												
3		***COST MODEL ASSUMPTIONS***												
4	**ITEM**													**Unit**
5	**Base Floor Size**	**1000**	**1200**	**1300**	**1400**	**1500**	**1600**	**1800**	**2400**	**3200**	**4000**	**5000**		**Cost**
39	Single Window Equiv (SWE) of One Story Homes	9	10	10	10	10	10	12	15	21	26	34		
40	1st Floor SWE of Two Story Homes	6	7	9	9	9	9	9	9	12	16	21		
41	SWE Adjustment for Two Story Homes	(3)	(3)	(1)	(1)	(1)	(1)	(3)	(6)	(9)	(10)	(13)		
42	Full Upper Floor Single Window Equivalents	6	6	7	8	8	8	8	8	10	12	14		
43	Half Story/Attic Single Window Equivalents	2	2	2	2	2	2	2	2	2	2	2		
44														
45	**UNIFORMAT II Computational Detail**													
46	A. SUBSTRUCTURE													
47	A10 Foundations													
48	A1010 Standard Foundations													
49	One Story Structure	6355	7237	7654	7886	8257	8629	9464	10855	14056	16700	19716		**46.39**
50	1.5 or Two Story Structure	8893	10126	10710	11035	11554	12073	13242	15189	19668	23368	27587		**64.91**

Cost Schedules for the 2012 Reassessment

New Cost Model & Resulting Schedules

- Impact on the 2012 Reassessment
  - Costs will be accurate and current
  - Impact on characteristics data & collection
    - Half story vs. Attic
    - Attached vs. Integral Garages
    - Grades & possible grade creep because of using outdated costs
    - Other?
- Impact on computer software
  - Table structure will not change – only table rates
  - Therefore, there should be no need to change software
  - Benchmark size points will be highlighted in Schedule A
  - Software may interpolate between size points if desired

Cost Schedules for the 2012 Reassessment

Other Information

- Tables will be field tested in a county prior to distribution
- Planned delivery of the preliminary cost information is July 1, 2011
- On or after January 1, 2012, we plan to provide updated cost schedules based upon Craftsman 2012 Cost Books
- Cost table guidance/information was provided in June 2010:
  - See http://www.in.gov/dlgf/files/100621_-_Wood_Memo_-_2012_General_Reassessment_Cost_Information.pdf
  - There was a follow-up DLGF conference call on June 25, 2010
  - Hence, there should be no surprises
- **QUESTIONS?**

Contact the Department of Local Government Finance

- *Terry Knee*
  - Telephone: 317-519-1809
  - Fax: 317.232.8779
  - E-mail: Tknee@dlgf.in.gov
- Web site: www.in.gov/dlgf
  - "Contact Us": www.in.gov/dlgf/2338.htm

- *Wayne Moore*
  - Telephone: 937.408.7342
  - Fax: 937.390.0936
  - E-mail: jwayne.moore@gmail.com
- Web site: www.jwaynemoore.net