Design and Installation Manual for the Infiltrator ATL™ System in Indiana

Infiltrator ATL System in Indiana	
INTRODUCTION	2
INDIANA-SPECIFIC INFORMATION	3
SYSTEM CONFIGURATIONS	10
SYSTEM DESIGN	17
SYSTEM DESIGN EXAMPLES	20
INSTALLATION INSTRUCTIONS	26
INSTALLER CHECKLIST	30
SKELETON PERMIT DRAWINGS – LEVEL SYSTEMS	31
SKELETON PERMIT DRAWINGS – SLOPED SYSTEMS	32
WARRANTY	33

The purpose of this manual is to provide the minimum specifications for design and installation of the Infiltrator ATL™ (Advanced Treatment Leachfield) System in Indiana. All local ordinances, requirements, and procedures must be followed. Each revised version of this manual supersedes the previous version.

The configurations presented in this document are common residential designs and are provided for illustrative purposes. They are not intended to restrict the use of other configurations, which may be utilized provided the design conforms to the latest edition of the Residential and Commercial Onsite Sewage Systems Rules (*410 IAC 6-8.3* and *410 IAC 6-10.1,* respectively), as applicable.

For more detailed design and installation information, please contact Infiltrator Water Technologies, LLC at 1-800-221-4436.

Indiana

The Infiltrator ATL System

The Infiltrator ATL is a patent-pending, proprietary system consisting of six components. Upon entering the Infiltrator ATL, septic tank effluent progresses through the following components.

- nominally 12-inch-diameter conduit
  - 4-inch-diameter pipe
  - Large-diameter synthetic aggregate
  - Coarse geotextile
  - Small-diameter synthetic aggregate
  - Fine geotextile
- specified system sand (6-inch minimum for subsurface and 12-inch minimum for above-grade systems)

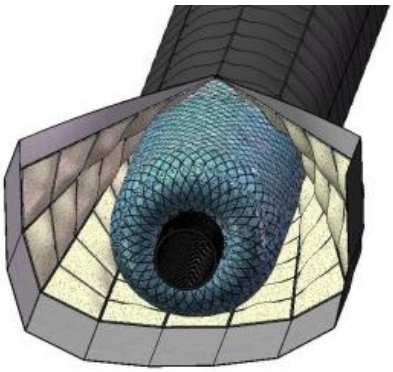

Infiltrator ATL Conduit

Infiltrator ATL System Definitions

"System sand" is the term used to describe the INDOT Specification 23 sand that surrounds the Infiltrator ATL System conduits. Upon exiting the system sand, treated effluent is readily accepted by the underlying native soil.

In this document, the "system sand footprint" refers to the surface onto which the Infiltrator ATL System conduit rows are placed and the 12 inches of component sand between the ATL conduit rows. The "basal area footprint" refers to the interface between the lowermost surface of the system sand and native soil. These definitions are portrayed in the diagram below.

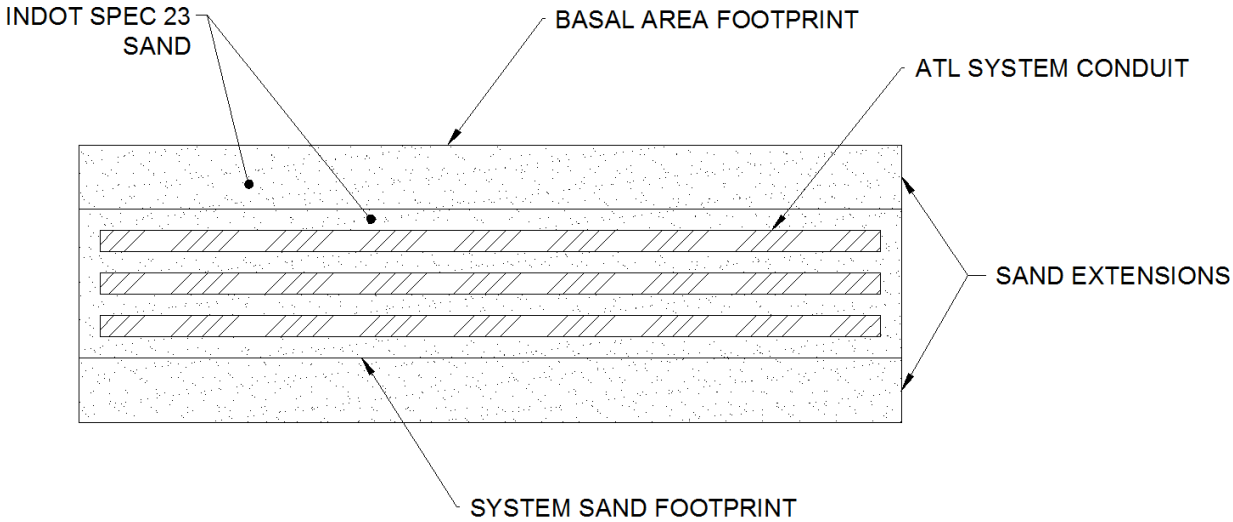

The Infiltrator ATL System is approved for use in the State of Indiana as a soil absorption field (SAF) technology by the Indiana Department of Health (IDOH) in accordance with 410 IAC 6-8.3 and 410 IAC 6-10.1. Testing in accordance with NSF/ANSI Standard 40 has determined that the Infiltrator ATL System is capable of treating domestic strength wastewater to Class I levels. This allows for design and installation of the Infiltrator ATL System in the State of Indiana with reduced soil absorption field requirements, and other conditions that are detailed in the Indiana Standards for the Infiltrator ATL System Soil Absorption Field Technology, effective June 27, 2025.

If design, installation, operation, or maintenance specifications are not specifically addressed in this manual, relevant requirements in 410 IAC 6-8.3 and 410 IAC 6-10.1 as well as all state and local requirements shall be applicable.

Cover Requirements

The minimum depth of cover for the ATL System in Indiana is 12 inches. The top 6 inches (minimum) of cover shall be comprised of material that is capable of sustaining plant growth, and shall be crowned to promote surface runoff.

Separation Distances

All horizontal separation distances shall be provided as detailed in 410 IAC 6-8.3-57 or 410 IAC 6-10.1-61, whichever is applicable. Vertical separation distances in systems comprised of multiple beds may be determined based upon the design flow of the individual beds. Vertical separation distances are measured from the infiltrative surface. The addition of an effluent pump to an ATL system does not reduce the vertical separation requirements. Vertical separation requirements for the allowable system configurations are detailed in Table A below.

Bed elevation	Type of Distribution	Design Daily Flow	Distance to Restrictive Feature	Distance to SHWT
Subsurface (Infiltrative surface ≥4” below original grade)	Gravity or Pump-assisted	<450 gpd (<3 bedrooms and equivalents)	24” (Note: Individual bed loading may be used to determine separation)	24” (may be lowered with subsurface drainage)
Subsurface (Infiltrative surface ≥4” below original grade)	Gravity or Pump-assisted	≥450 gpd (≥3 bedrooms and equivalents)	30”	24” (may be lowered with subsurface drainage)
Subsurface (Infiltrative surface ≥4” below original grade)	Pressure Distribution	Any	24”	24” (may be lowered with subsurface drainage)
Elevated (Infiltrative surface <4” below original grade)	Gravity, Pump-assisted, or Pressure Distribution	Any	20”	20” (may be lowered with subsurface drainage)

Table A. Required vertical separation distances based on system elevation, distribution, and flow rate.

Subsurface Systems

An ATL System shall be considered subsurface when the system sand/native soil interface (infiltrative surface) is a minimum of 4 inches below original grade.

Subsurface Drainage/Surface Diversions

Subsurface drainage and surface diversions shall be required when required in 410 IAC 6-8.3-59 or 410 IAC 6-10.1-63, whichever is applicable. Subsurface drains and surface diversions shall be designed and installed in accordance with those sections of the state rules.

Dispersal Area

The ATL System shall be provided with a dispersal area (outside the system sand bed area) as required in 410 IAC 6-8.3-58 or 410 IAC 6-10.1-62, whichever is applicable.

Observation Ports

IDOH approval of the ATL System requires that each system (or each bed in a system comprised of more than one bed) shall include an observation port (see Page 28 for installation instructions).

Installer, Designer, & Health Department Personnel Certification

The ATL System is approved for use in Indiana with a number of conditions, including a requirement that Infiltrator Water Technologies, LLC provide ongoing training on the design, installation, and inspection of the ATL System. Infiltrator Water Technologies, LLC will provide regularly scheduled training sessions on design, installation, and inspection of the ATL System, and give notice of such training meetings. All designers, installers, and local health department personnel who review and approve plans and conduct inspections must be trained and certified by an authorized Infiltrator representative in order to work with the ATL System. Please see Page 30 for a copy of a form titled “Infiltrator ATL System Installer Checklist – Indiana”.

Venting

Venting of the ATL System is not recommended by the manufacturer. In all applications where the depth of cover material is greater than 18 inches, venting is required by IDOH. See Pages 7-8 for details of a venting option.

System Use and Abuse

The Infiltrator ATL System is intended for use with residential strength wastewater in acceptable volumes. To ensure long-term function of your system:

- Keep daily wastewater flow within design parameters
  - Do not connect the rainwater management system to the ATL System: and
  - Direct water from the rainwater management system away from, the site
- Introduce only normal residential wastewater into the system

- Solvents, paint, pharmaceuticals, and non-biodegradable items should not enter the system
- Solids, such as but not limited to, cigarette butts, feminine hygiene products, and paper towels should not be introduced into the system

- Maintain faucets and toilets

Dosing

An effluent pump can be used to supply effluent to an ATL system using pump-assisted (pump-to-gravity) distribution or pressure distribution. Dosing tanks, effluent pumps and effluent force mains must comply with IDOH Rule 410 6-8.3 Section 62, 65, 67 or Rule 410 6-10.1 Section 70, 73, and 75.

Pump-Assisted Dosing

When an ATL System is pump-assisted, the maximum dose volume shall be 1/3 of the daily design flow. The remaining system design elements must comply with IDOH Rule 410 6-8.3 Sections 75 and 76 or IDOH Rule 410 6-10.1 Sections 83 and 84. Using a pump does not reduce required vertical separation distances.

Pressure Distribution Dosing

Pressure Distribution

Pressure distribution may be used within an ATL system if preferred or soil conditions require. A design head of 3 feet is required for pressure distribution systems.

• Subsections of section 78 of the residential rule that are applicable to ATL with pressure distribution include: (b), (e), (f), (g), (h), (i), (j), (l), (m), (o), (p), (q), and (s)
• Subsections of section 78 of the residential rule that are not applicable to ATL with pressure distribution include: (a), (c), (d), (k), (n), and (r). An explanation of these differences is detailed in the table below.

Subsection of Section 78	Rule Requirement	IWT Requirements which differ from the rule
a	Incorporates section 74 into these requirements.	All subsections of section 74 apply except those that refer specifically to subsurface trench soil absorption fields, unless it/they can be applied to subsurface beds.
c	Requires 2.5-3’ of residual head.	Requires 3’ of residual head.
d	Requires dose tank capacity to include a dose volume of ¼ DDF or 1 DDF, dependent upon soil loading rate.	The maximum dose volume shall be 1/3 of the daily design flow. There should be a minimum dose volume of 0.3 gallons per linear foot of ATL conduit.
k	Diameter of pressure distribution laterals determined by length of lateral.	All laterals are 1.5” in diameter.

n	Requires orifices to be placed in the trench facing down with all holes deburred.	The first and last orifices are to be facing down. All other orifices are to spray up.
r	Requires each lateral end to be capped with a ¼" orifice in the endcap.	Cleanouts are required on each row.

• Subsections of section 82 of the residential rule that are applicable to ATL with pressure distribution include: (a), (d), (e), (f) and (g).
• Subsections of section 82 of the residential rule that are not applicable to ATL with pressure distribution may include: (b), (c), (h), and (i). An explanation of these differences is detailed in the table below.

Subsection of Section 82	Rule Requirement	IWT requirements which differ from the rule
b and c	Requires dose tank capacity to include a dose volume of ¼ DDF.	The maximum dose volume shall be 1/3 of the daily design flow. There should be a minimum dose volume of 0.3 gallons per linear foot of ATL conduit.
h	Specifies lateral length and diameter.	Requires 1.5" diameter laterals. All other parts of this subsection apply.
i	Shows and describes lateral layout in an aggregate bed of an elevated sand mound.	Requires installation in conduit and specific conduit layout.

Complimentary subsections in the commercial rule are the same.

When pressure distribution is specified, parallel distribution shall be utilized with a pressure manifold rather than a distribution box. Infiltrator recommends using a 1.5-inch schedule 40 PVC pressure pipe with 1/4-inch orifices with variable spacing between orifices. The first and last orifices are to be facing down, in the center of the row, and deburred. All other orifices should be facing up and in the center of each row and all holes deburred, see Figure 1.2 below. The pressure pipe shall have a clean out at the end of the conduit row (Figure 2.1). Infiltrator does not recommend venting ATL systems using pressure distribution, unless there is >18" cover to adhere to Indiana rules. These are Infiltrator recommendations; system designers can deviate from these recommendations if they comply with the IDOH rules.

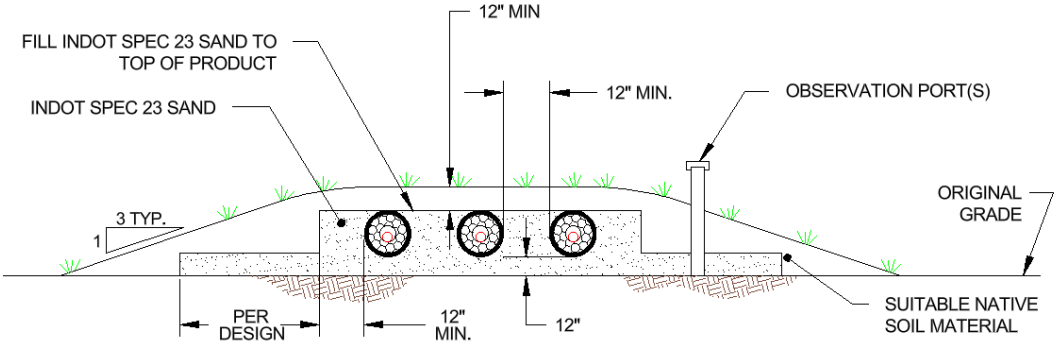

Figure 1.1. ATL with pressure distribution cross section.

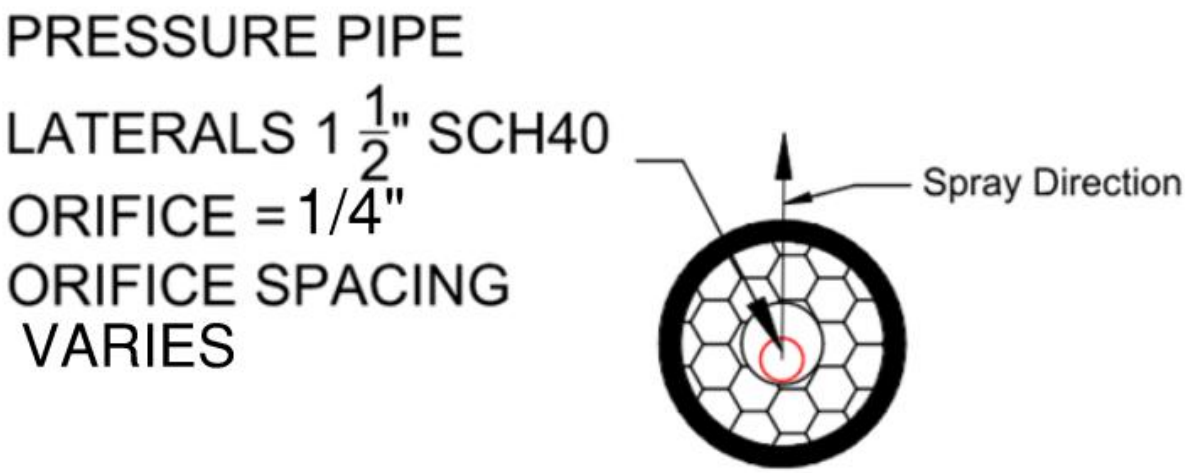

Figure 1.2. ATL pressure pipe. The first and last orifices in each row should be facing down.

NOTE: End caps shall be predrilled to match the outside diameter of the low pressure pipe and located to seat on the bottom of the 4-inch distribution pipe.

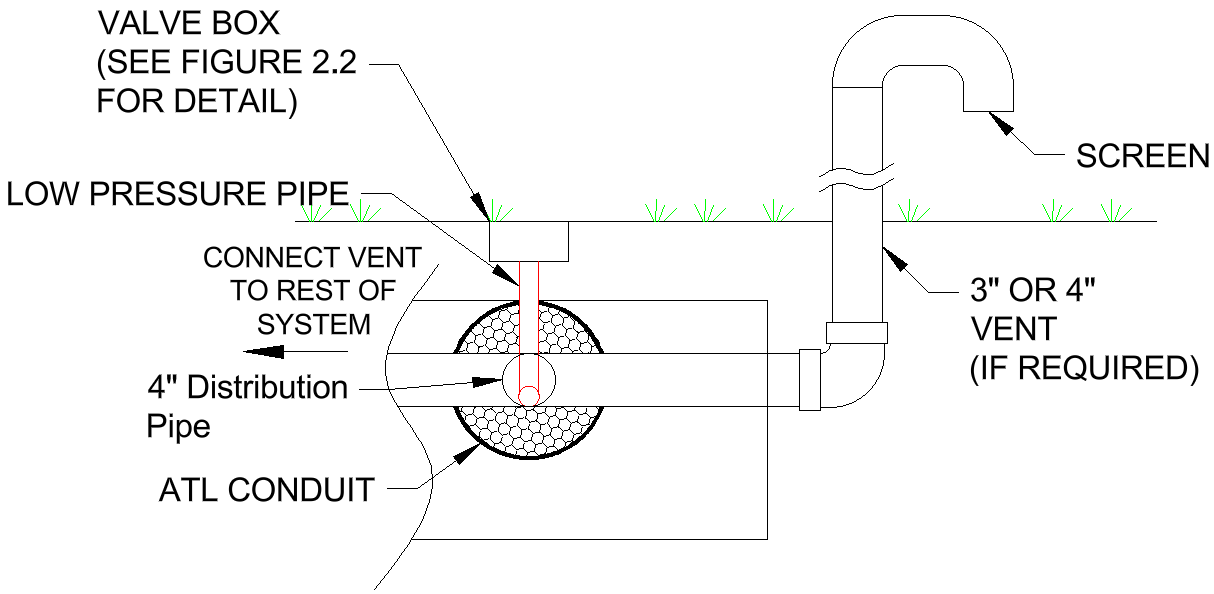

Figure 1.3. ATL with pressure distribution venting detail cross-section view (if venting is required).

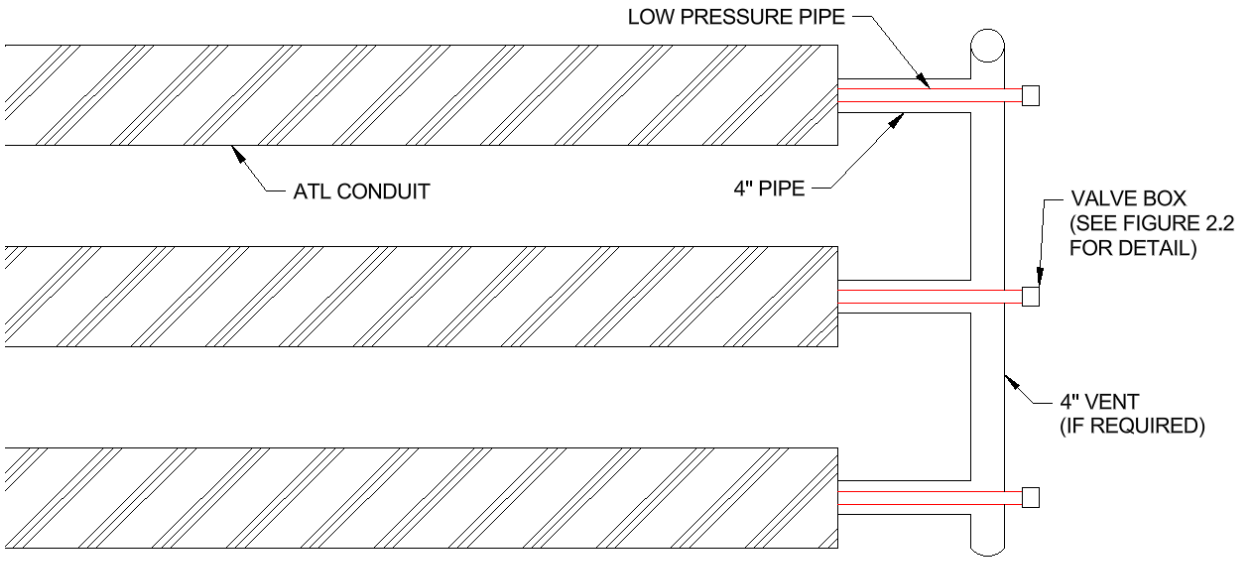

Figure 1.4. ATL with pressure distribution venting detail plan view (if venting is required).

Elevated and subsurface beds utilizing pressure distribution will differ in pump sizing and manifold size and location.

Minimum ATL System Basal Area Footprint

The minimum allowable basal area footprint for any ATL System is 350 sf.

Sand Extension

The term “sand extension” describes the 6-inch deep layer of system sand that is added to the system sand footprint in order to meet the minimum basal area footprint requirement for the ATL System on the given site.

On sites which include slopes of more than 10%, a minimum 3-foot sand extension must be added along the full length of the Infiltrator ATL System on the downslope side, regardless of the minimum basal area footprint requirements (see Table 1). If a sand extension greater than 3 foot is needed to achieve the minimum basal area footprint requirements, that system does not need an additional 3-foot sand extension on the downslope side.

Sloped Subsurface Systems with Modified Bed Slopes

When site slopes are steep, it may be desirable to install the basal area of a subsurface ATL system at a lesser slope. The original site slope cannot exceed 15%; however the slope of the absorptive surface may be excavated to be more level than the actual site slope for ease of installation to prevent the movement of effluent to the downslope toe of the system too rapidly. The minimum vertical separation to the restrictive layer must be maintained throughout the system. The excavated bed must have at least ½% slope in the same direction as the original site slope. See Page 13 for details.

Distribution Boxes (D-Boxes)

A distribution box (d-box) shall be used with the ATL System as follows:

- to divide flow to more than one ATL conduit row within a bed comprised of multiple ATL conduit rows (parallel distribution);
- to separate flow equally between multiple beds; and
- in all pump-to-gravity distribution systems.
- Distribution boxes shall not be used in ATL Systems using pressure distribution.

There is no minimum separation distance requirement from a d-box to the Infiltrator ATL conduit.

Clean Outs

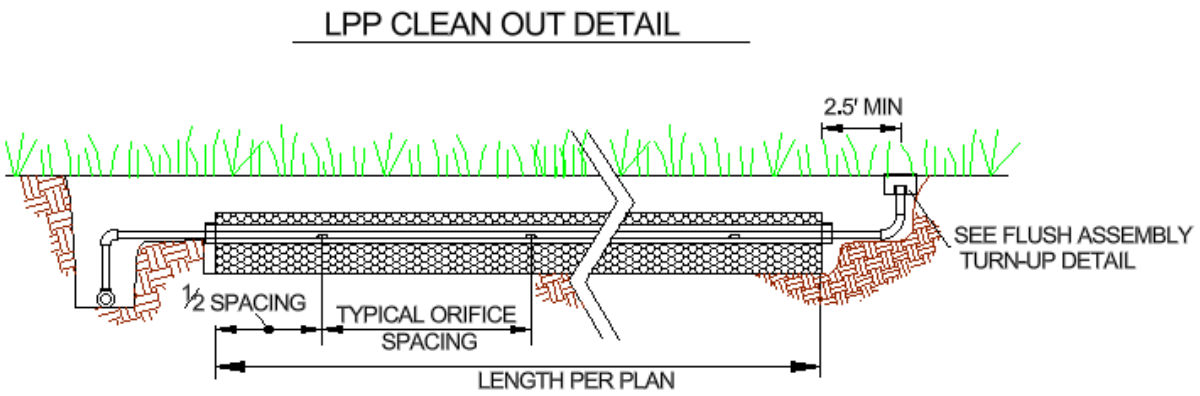

Figure 2.1. LPP clean out detail.

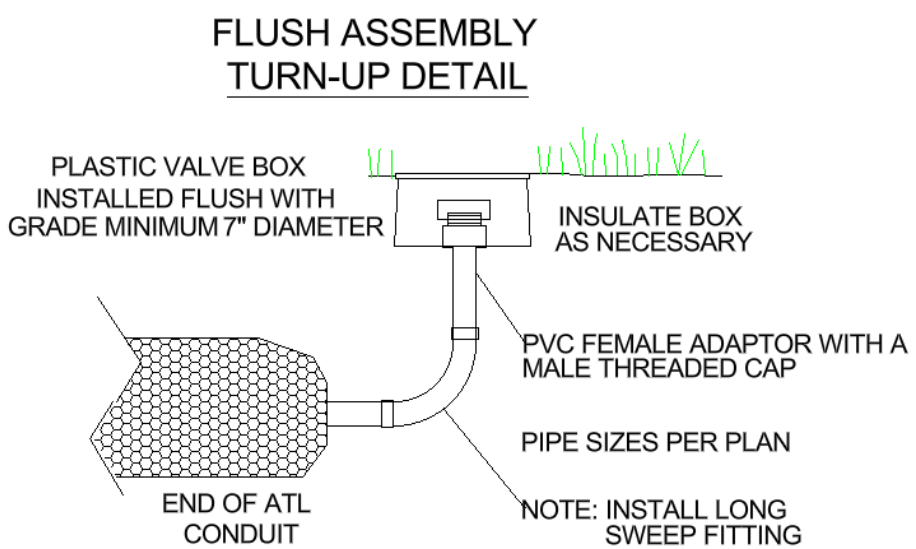

Figure 2.2. Turn-up Detail.

The ATL System can be designed in subsurface and above-ground applications on both level and sloped sites. Examples are shown in the following pages.

The following minimum system sand dimensions are required for all Infiltrator ATL System configurations:

- 12 inches between adjacent Infiltrator ATL conduit rows;
- 12 inches beside (outside) any Infiltrator ATL conduit row with no adjacent conduit row; and
- 12 inches extending beyond both ends of the Infiltrator ATL conduit rows.

Additional requirements apply depending upon site-specific slope conditions and the position of the Infiltrator ATL System relative to ground surface elevation, as outlined in Table 1.

Site-Specific Slope Conditions	**System Position Relative to Ground Surface**	
	Subsurface (infiltrative surface ≥4” below original grade)	**Above-Ground** (infiltrative surface <4” below original grade)
Level (≤0.5% slope)	• 6-inch minimum system sand below conduit rows • Serial, parallel, or pressure distribution	• 12-inch minimum system sand below conduit rows • Serial, parallel, or pressure distribution
Sloped (>0.5 to 15% slope)	• 15% maximum allowable slope • 6-inch minimum system sand below conduit rows • 3-foot minimum downslope system sand extension on sites with slopes >10% and ≤15% • Serial or pressure distribution	• 6% maximum slope • 12-inch minimum system sand below conduit rows • Serial or pressure distribution

Table 1: Infiltrator ATL requirements based on site-specific conditions

Level Subsurface Systems

Cross-Section View

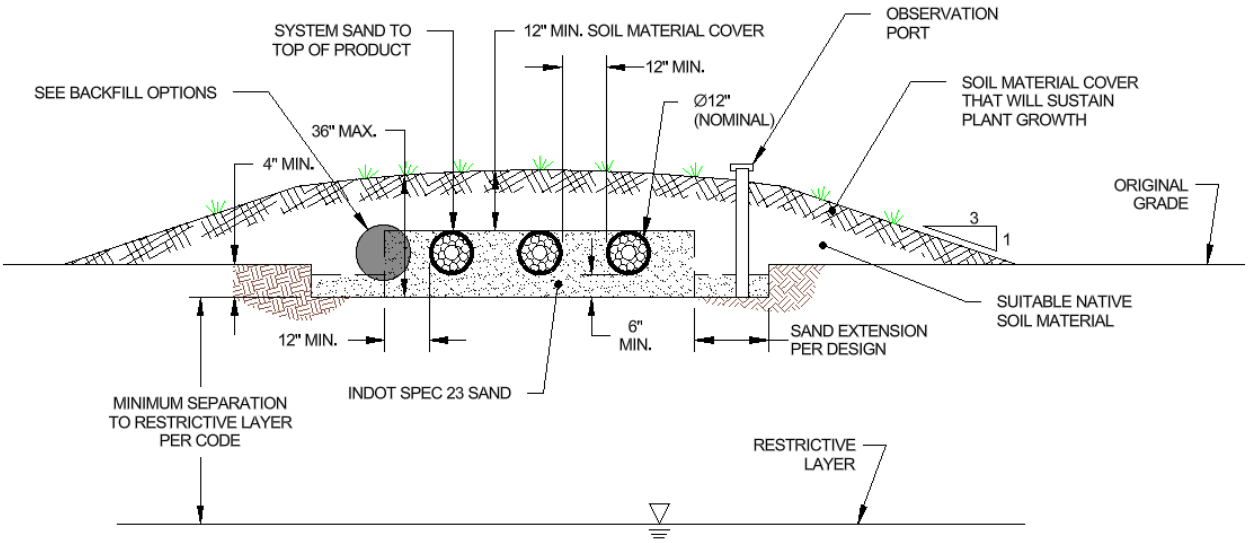

Plan View

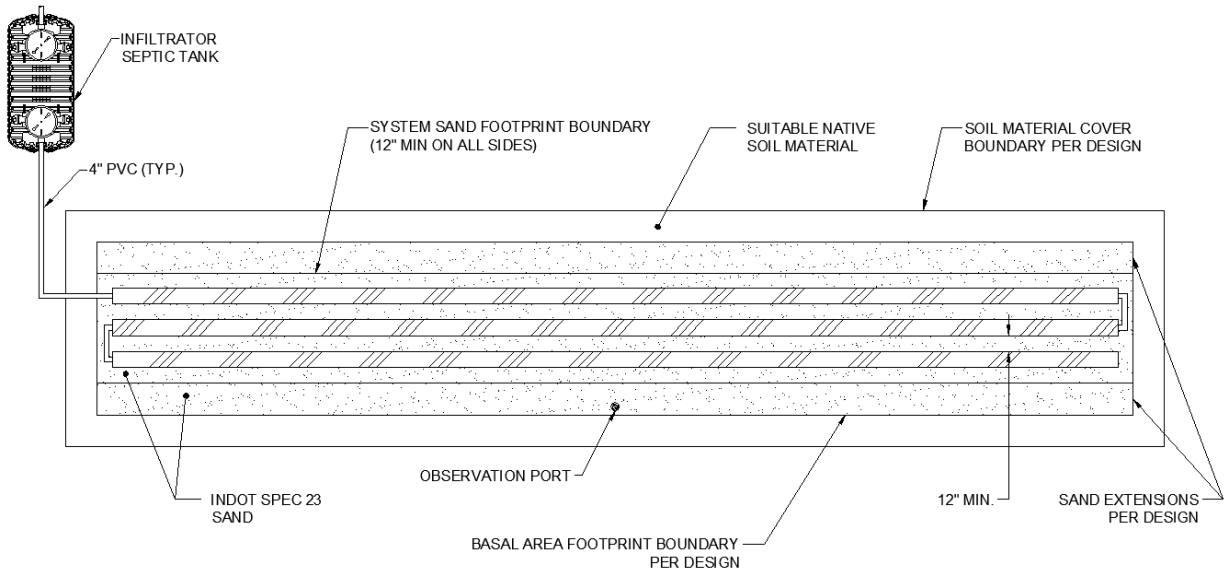

NOTES:

1. Number and length of conduit rows per design.
2. Serial distribution shown, but system may be served by distribution box to provide parallel distribution.
3. An observation port shall be placed within one foot of the basal area footprint boundary, at the longitudinal midpoint of the system, and shall extend to the soil interface.
4. Pumping is not required unless gravity flow cannot be achieved.
5. Pressure distribution is allowed but cannot use serial distribution and does not use a d-box but must have a pump.

Sloped Subsurface Systems

Cross-Section View

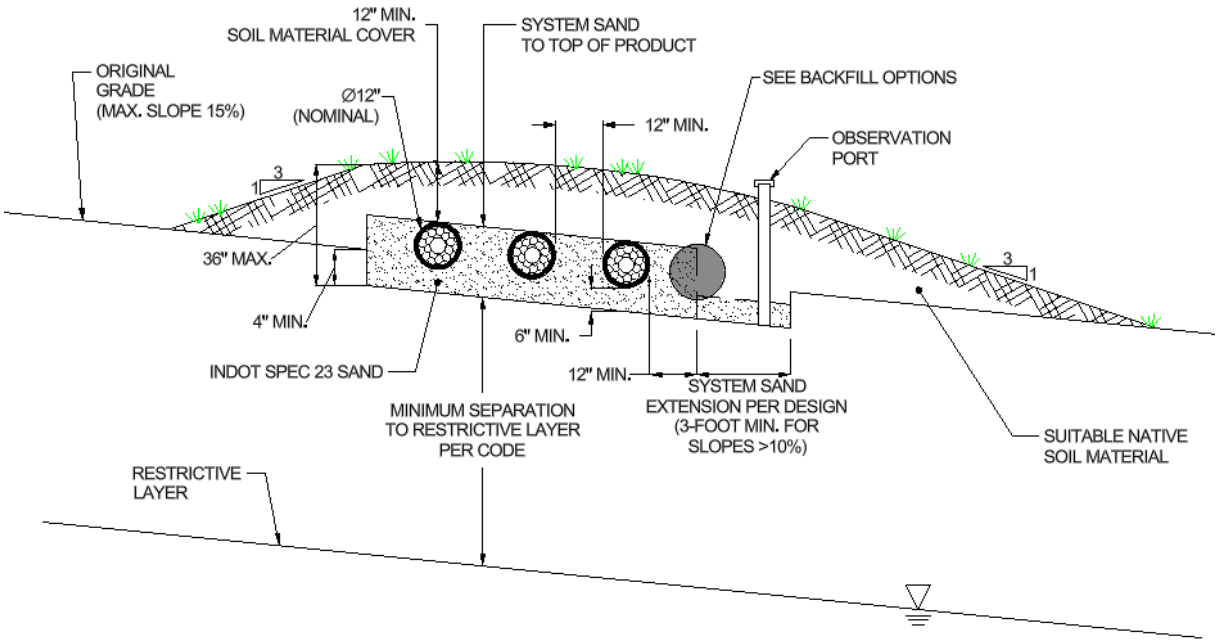

Plan View

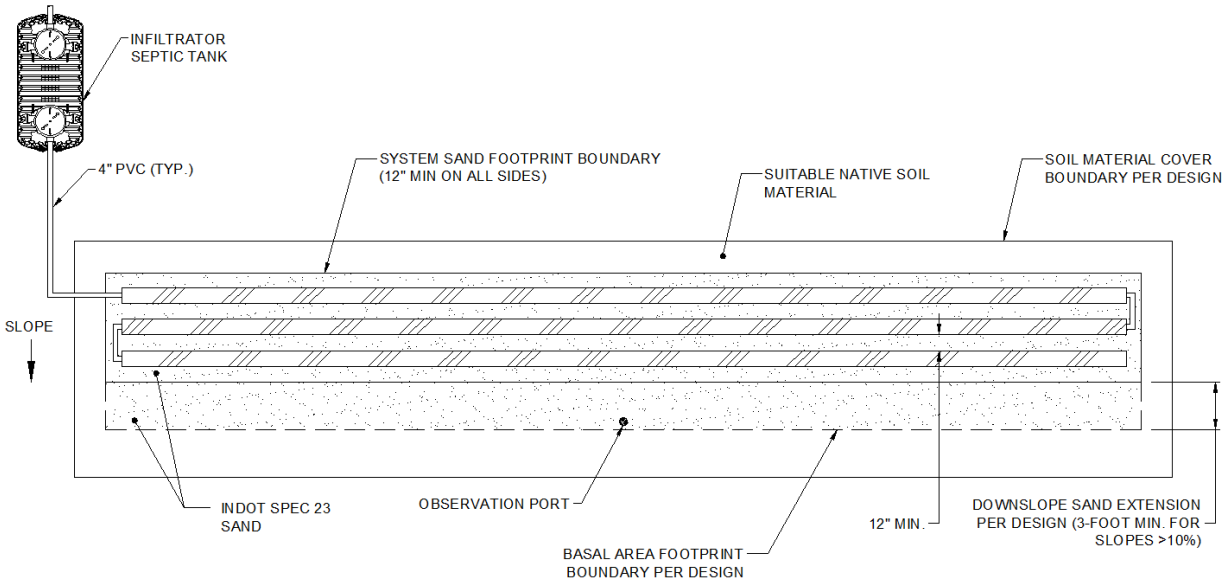

NOTES:

1. Number and length of conduit rows per design.
2. Serial or pressure distribution. Pressurized systems must use parallel distribution.
3. The minimum downslope sand extension is 3 feet for slopes greater than 10%.
4. An observation port shall be placed within one foot of the downslope basal area footprint boundary, at the longitudinal midpoint of the system, and extend to the soil interface.
5. Pumping is not required unless gravity flow cannot be achieved.
6. Pressure distribution cannot use serial distribution and does not use a d-box but must have a pump.

Sloped Subsurface System with Modified Bed Slope

Cross-Section View

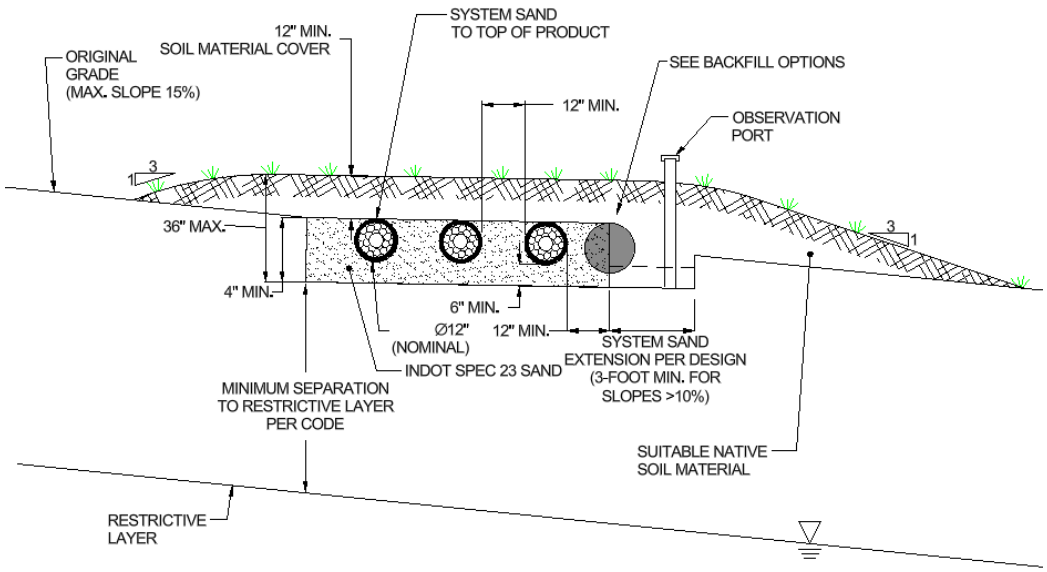

Plan View

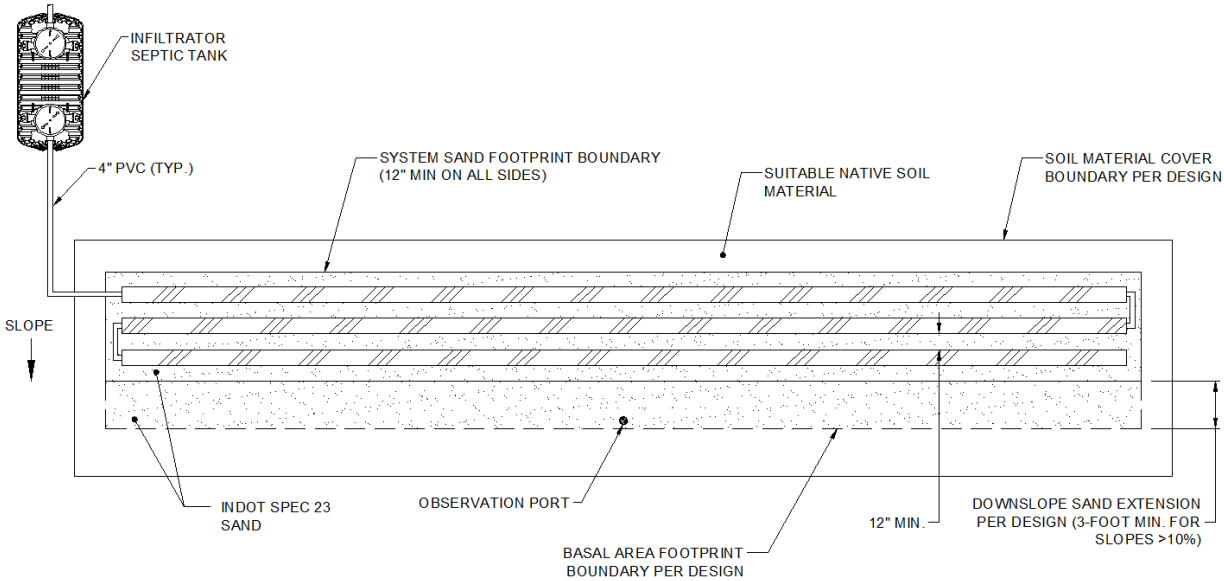

NOTES:

1. Number and length of conduit rows per design.
2. Serial, parallel, or pressure distribution is allowed.
3. The minimum downslope sand extension is 3 feet for slopes greater than 10%.
4. An observation port shall be placed within one foot of the downslope basal area footprint boundary, at the longitudinal midpoint of the system, and extend to the soil interface.
5. Pumping is not required unless gravity flow cannot be achieved.
6. Pressure distribution cannot use serial distribution and does not use a d-box but must have a pump.
7. The minimum vertical separation to the restrictive layer must be maintained throughout the system.
8. Minimum slope for the modified bed is ½%.

Level Above-Grade Systems

Cross-Section View

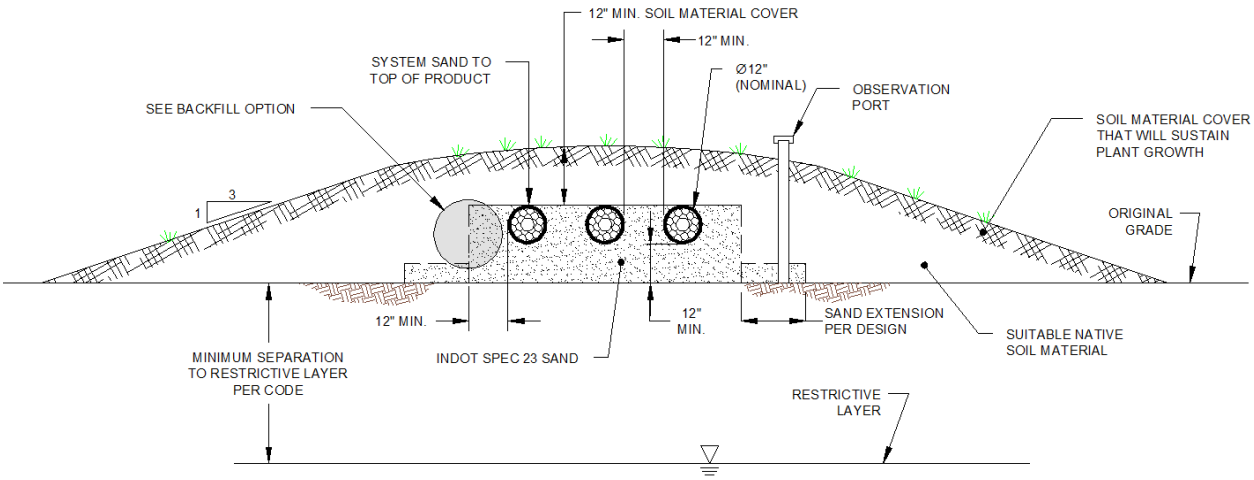

Plan View

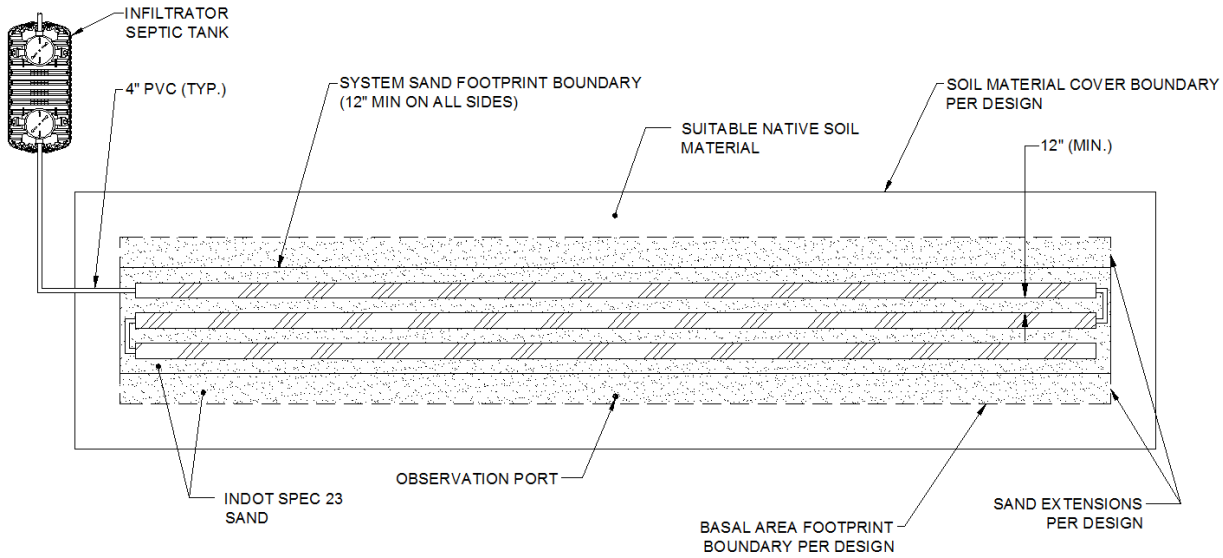

NOTES:

1. Number and length of conduit rows per design.
2. Serial distribution shown, but system may be served by distribution box to provide parallel distribution.
3. An observation port shall be placed within one foot of the basal area footprint boundary, at the longitudinal midpoint of the system, and extend to the soil interface.
4. Pumping is not required unless gravity flow cannot be achieved.
5. Dimensions as shown reflect a system configuration footprint utilizing construction forms.
6. Pressure distribution is allowed but cannot use serial distribution and does not use a d-box but must have a pump.

Sloped Above-Grade Systems

Cross-Section View

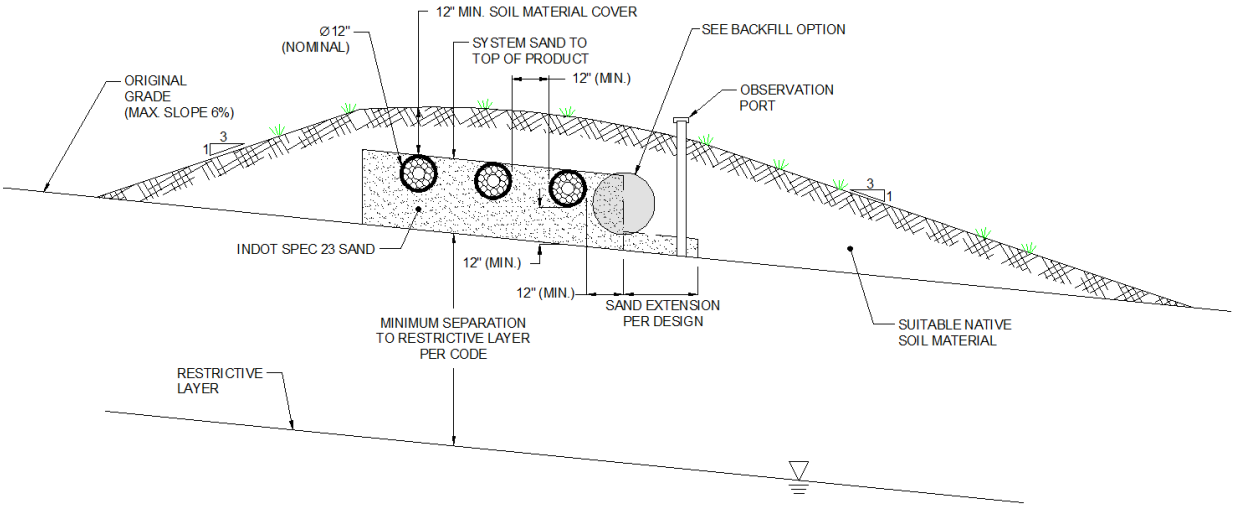

Plan View

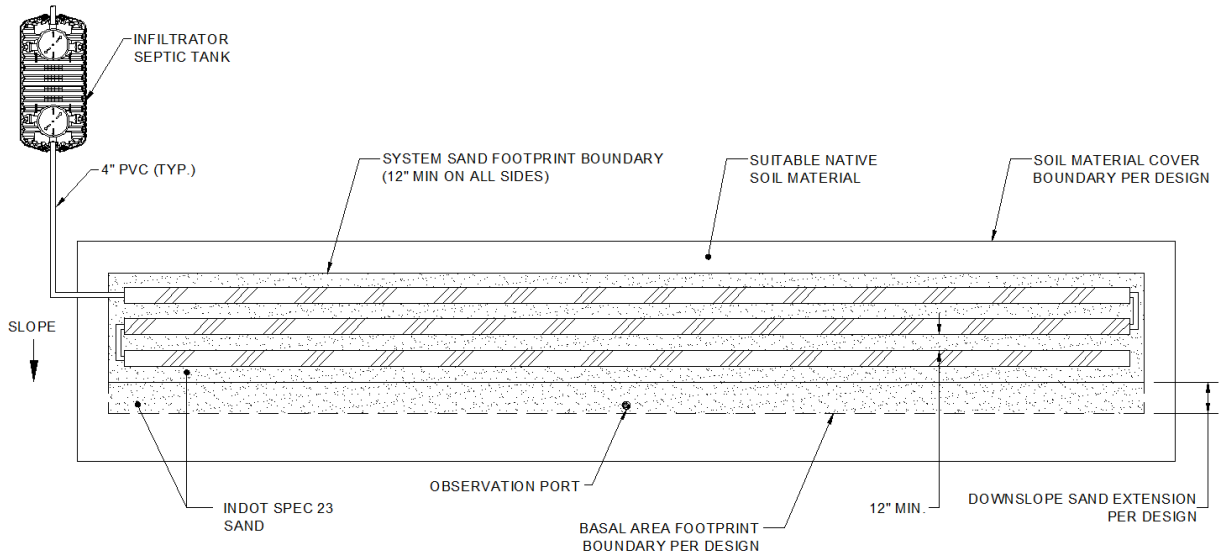

NOTES:

1. Number and length of conduit rows per design.
2. Serial or pressure distribution.
3. An observation port shall be placed within one foot of the basal area footprint boundary, at the longitudinal midpoint of the system, and extend to the soil interface.
4. Pumping is not required unless gravity flow cannot be achieved.
5. Dimensions as shown reflect a system configuration footprint utilizing construction forms.
6. Pressure distribution is allowed but cannot use serial distribution and does not use a d-box but must have a pump.

Backfilling Options

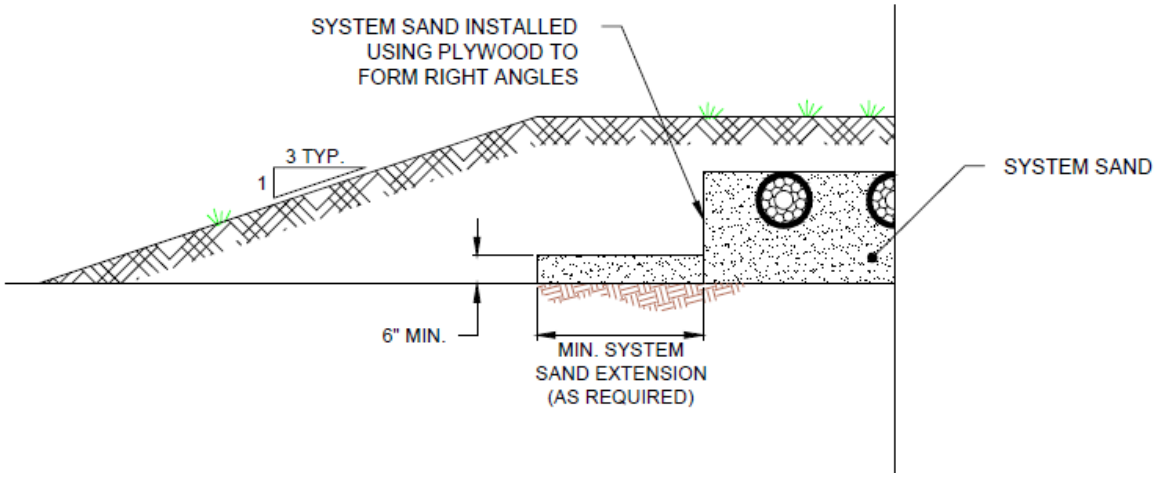

An alternative method of backfilling the system is to allow the system sand to slump over the system sand extension rather than using forms.

Designing the Infiltrator ATL System is a four-step process, per *410 IAC 6-8.3* and *410 IAC 6-10.1*.

1. *Determine Infiltrator ATL Total Conduit Length*
2. *Design the System Sand Configuration*
3. *Calculate the Minimum Basal Area*
4. *Design the Basal Area Footprint*

Step 1: Determine Infiltrator ATL Total Conduit Length

The minimum length of Infiltrator ATL conduit per bedroom is 70 feet. Determine the minimum total length of Infiltrator ATL conduit from Table 2 based on the number of bedrooms.

Number of Bedrooms	Design Flow (gpd)	Minimum Infiltrator ATL Length (ft)
2	300	140
3	450	210
4	600	280
Each Additional	150	70

Table 2: Minimum required Infiltrator ATL conduit length

Step 2: Design the System Sand Configuration

Use Table 3 to determine the minimum system sand footprint using the minimum length of Infiltrator ATL conduit as determined from Table 2 and the number of rows into which the total length of conduit will be divided. The following requirements must be met for design of the system sand:

- The system shall be designed as long and narrow as site conditions allow. Therefore, the number of rows of Infiltrator ATL conduit shall be minimized.
- The maximum length of ATL conduit rows is 100 feet, therefore, where the conduit row length would exceed 100 feet in Table 2, the system shall be divided as follows:
    - Center-feed configurations are recommended, with effluent distributed from the center area between the ATL conduit rows.
    - Where a center-feed configuration is not used, the system shall be split into multiple beds with proportional loading between beds.

Minimum Length of ATL Conduit (ft)	Minimum system sand dimensions and area					
	2 Conduit Rows		3 Conduit Rows		4 Conduit Rows	
	Dimensions (W' x L')	Area (sf)	Dimensions (W' x L')	Area (sf)	Dimensions (W' x L')	Area (sf)
140	5 x 72	360	7 x 52	364	9 x 37	333
210	5 x 109[1]	545	7 x 72	504	9 x 57	513
280	5 x 144[1]	720	7 x 97	679	9 x 72	648
350	5 x 179[1]	895	7 x 124[1]	868	9 x 92	828

Table 3: Minimum system sand dimensions and area

NOTES:

1. *These configurations must use center feed or the flow must be split among multiple beds. When multiple beds are used, the placement of the beds must be end to end, instead of side by side, where site conditions permit.*
2. *The values listed in Table 3 represent the minimum system sand dimensions. These dimensions are calculated by dividing the total conduit length required by the number of rows and adding the system sand required between and outside of the conduit rows (one foot on the sides and each end).*
3. *Infiltrator ATL conduits comes in 5- and 10-foot lengths; all conduit row length calculations are to be rounded up to the nearest 5 feet (and add 1 foot of system sand on each end to determine the length of the bed).*
4. *In pump-to-gravity and pressure distribution applications, design dose volumes shall be a maximum of 1/3 of the daily design flow. The addition of an effluent pump to an ATL system does not reduce the vertical separation requirements.*

Step 3: Calculate the Minimum Basal Area

Use 410 IAC 6-8.3 Table IV (subsurface) or V (above-ground) or 410 IAC 6-10.1 Table V (subsurface) or VI (above-ground) to determine the appropriate site-specific soil loading rate. Determine the minimum required ATL System basal area using Table 4. The minimum allowable basal area is 350 sf.

Loading Rate per 410 IAC 6-8.3 Table IV or V or 410 IAC 6-10.1 Table V or VI (gpd/sf)	Minimum ATL System basal area (sf)				
	2 Bedrooms	3 Bedrooms	4 Bedrooms	5 Bedrooms	Each Additional Bedroom
1.20	350	350	350	419	84
0.75	350	402	536	670	134
0.60	350	503	670	838	168
0.50	402	603	804	1,005	201
0.30	670	1,005	1,340	1,675	335
0.25	804	1,206	1,608	2,010	402

Table 4: Minimum basal area

Step 4: Design the Basal Area Footprint

The minimum areas determined in Steps 2 and 3 cannot be reduced. These areas must be maintained to ensure adequate area for placement of the Infiltrator ATL System conduit rows and infiltration of partially treated effluent into the native soil.

Sand extensions are necessary as follows:

- If the minimum basal area footprint determined using Table 4 (Step 3) is smaller than the area of the system sand footprint determined using Table 3 (Step 2), no sand extensions are necessary.

- If the minimum basal area footprint determined using Table 4 (Step 3) is larger than the area of the system sand footprint determined using Table 3 (Step 2), sand extensions* must be added to meet the minimum basal area requirements. When adding sand extensions:
  - In level system applications, additional width shall be evenly divided on each side of the Infiltrator ATL System;
  - In sloped system applications, additional width shall be entirely placed on the downslope side of the Infiltrator ATL System. Minimum sand extensions are outlined in Tables 1 and 5.

System Position Relative to Ground Surface	
Sloped Subsurface (infiltrative surface ≥4” below original grade)	**Sloped Above-Ground** (infiltrative surface <4” below original grade)
• Add 3-foot minimum downslope system sand extension on sites with slopes >10% and ≤15%	• No minimum sand extension required • Restricted to site slopes of ≤6%

Table 5: Sand extension requirements for sloped systems

***NOTE:** The length of the bed area may be altered, but only by extending the Infiltrator ATL System conduit rows. This method may be preferred over increasing the width of the system under certain site and system design considerations.*

The following sample system design calculations are intended to illustrate the method for designing an Infiltrator ATL System. The sample system design calculations are provided in the step-by-step format described in the System Design section of the document.

Example I – Subsurface System – Level Site (≤ ½%)

Assume the following baseline specifications:

- 4-bedroom residence
- 0.30 gallons per day per square foot (gpd/sf) Indiana Rule soil loading rate

Step 1: Determine Infiltrator ATL Total Conduit Length

Per Table 2, a 4-bedroom home calls for a minimum total of 280 linear feet of ATL conduit.

Step 2: Design the System Sand Configuration

Per Table 3, for a 280-foot conduit length, the following configurations could be used, as allowed per site conditions.

- 2 conduit rows wide – 5 ft wide x 144 ft long (720 sf)
- 3 conduit rows wide – 7 ft wide x 97 ft long (679 sf)
- 4 conduit rows wide – 9 ft wide x 72 ft long (648 sf)

Step 3: Calculate the Minimum Basal Area

Per Table 4, for a soil loading rate of 0.30 gpd/sf, the minimum basal area is 1,340 sf.

Step 4: Design Basal Area Footprint

Where site conditions allow the use of 3 ATL conduit rows in the system, the minimum length would be 97 ft and the minimum width would be 7 ft, for a system sand footprint of 679 sf. Since the minimum required 1,340-sf basal area footprint is larger than the 679-sf system sand footprint, the addition of sand extensions is required. Minimum sand extensions are calculated as follows:

• *Divide the minimum basal area footprint by the length of the system sand to determine the minimum basal area width.*	1,340 sf ÷ 97 ft = 13.81 ft
• *Subtract the system sand footprint width from the above minimum basal area width to determine the total sand extension required.*	13.81 ft - 7 ft = 6.81 ft
• *Divide the total sand extension required by 2 to determine the minimum sand extension required on each side of the system.* ***NOTE:*** *Round up and convert to feet/inches for ease of installation.*	6.81 ft ÷ 2 = 3.41 ft (3 ft 5 in)
• *The system must be widened by 6.81 feet (6 ft 10 in), by adding a 3-foot, 5-inch sand extension to each side, resulting in a total width of 13 feet, 10 inches.*	13.83 ft x 97 ft = 1,341 sf

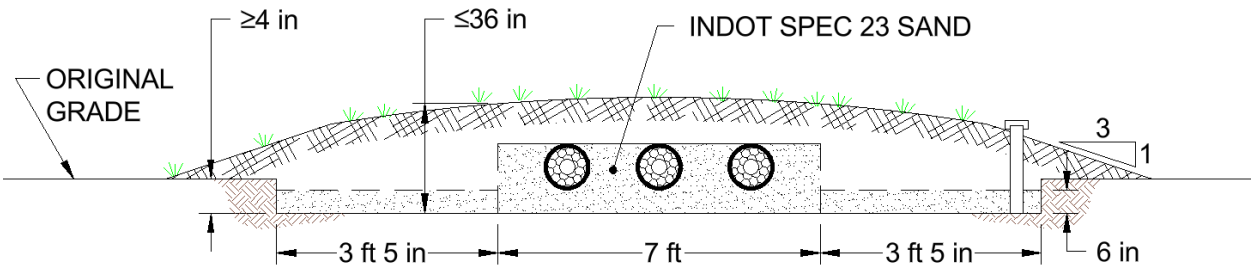
≥4 in
≤36 in
INDOT SPEC 23 SAND
ORIGINAL
GRADE
3
1
3 ft 5 in
7 ft
3 ft 5 in
6 in

Example II – Subsurface System – Sloped Site (>½%)

Assume the following baseline specifications:

- 4-bedroom residence
- 0.50 gpd/sf Indiana Rule soil loading rate
- 11% slope on site

Step 1: Determine Infiltrator ATL Total Conduit Length

Per Table 2, a 4-bedroom home calls for a minimum total of 280 linear feet of ATL conduit.

Step 2: Design the System Sand Configuration

Per Table 3, for a 280-foot conduit length, the following configurations could be used, as allowed per site conditions.

- 2 conduit rows wide – 5 ft wide x 144 ft long (720 sf)
- 3 conduit rows wide – 7 ft wide x 97 ft long (679 sf)
- 4 conduit rows wide – 9 ft wide x 72 ft long (648 sf)

Step 3: Calculate the Minimum Basal Area

Per Table 4, for a soil loading rate of 0.50 gpd/sf, the minimum basal area is 804 sf.

Step 4: Design Basal Area Footprint

Tables 1 and 5 require a 3-ft downslope sand extension on sites with slopes >10% and ≤15%.

Where site conditions allow the use of 3 ATL conduit rows in the system, the minimum length would be 97 ft and the minimum width would be 10 ft (7 ft minimum plus the 3 ft minimum downslope sand extension), for a system footprint of 970 sf. The minimum required 804-sf basal area footprint is smaller than the 970-sf system footprint, so no additional sand extensions are required.

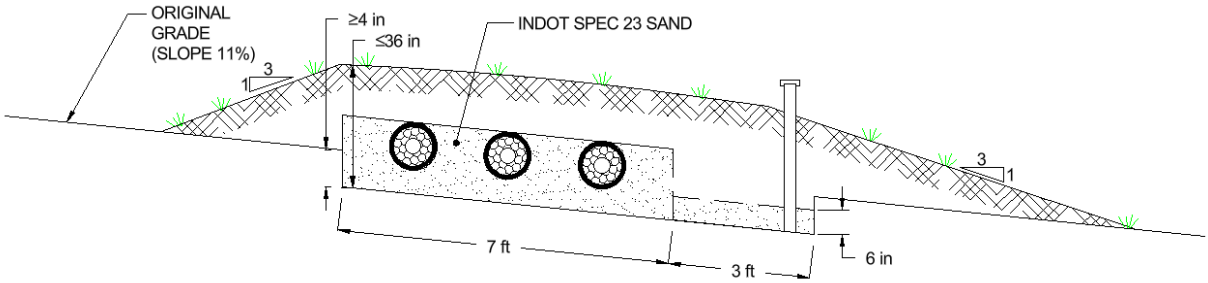

Example III – Above-ground System – Level Site (≤ ½%)

Assume the following baseline specifications:

- 3-bedroom residence
- 0.25 gpd/sf Indiana Rule soil loading rate

Step 1: Determine Infiltrator ATL Total Conduit Length

Per Table 2, a 3-bedroom home calls for a minimum total of 210 linear feet of ATL conduit.

Step 2: Design the System Sand Configuration

Per Table 3, for a 210-foot conduit length, the following configurations could be used, as allowed per site conditions.

- 2 conduit rows wide – 5 ft wide x 109 ft long (545 sf)
- 3 conduit rows wide – 7 ft wide x 72 ft long (504 sf)
- 4 conduit rows wide – 9 ft wide x 57 ft long (513 sf)

Step 3: Calculate the Minimum Basal Area

Per Table 4, for a soil loading rate of 0.25 gpd/sf, the minimum basal area is 1,206 sf.

Step 4: Design Basal Area Footprint

Where site conditions allow the use of 3 ATL conduit rows in the system, the minimum width would be 7 ft and the minimum length would be 72 ft, for a system sand footprint of 504 sf. Since the minimum required 1,206-sf basal area footprint is larger than the 504-sf system sand footprint, the addition of sand extensions is necessary. Minimum sand extensions are calculated as follows:

• *Divide the minimum basal area footprint by the length of the system sand to determine the minimum basal area width.*	1,206 sf ÷ 72 ft = 16.75 ft
• *Subtract the system sand footprint width from the above minimum basal area width to determine the total sand extension required.*	16.75 ft - 7 ft = 9.75 ft
• *Divide the total sand extension required by 2 to determine the minimum sand extension required on each side of the system.* ***NOTE:*** *Round up and convert to feet/inches for ease of installation.*	9.75 ft ÷ 2 = 4.875 ft (4 ft 11 in)
• *The system must be widened by 9.75 feet, by adding a 4-foot, 11-inch sand extension to each side, resulting in a total width of 16 feet, 10 inches.*	16.83 ft x 72 ft = 1,211 sf

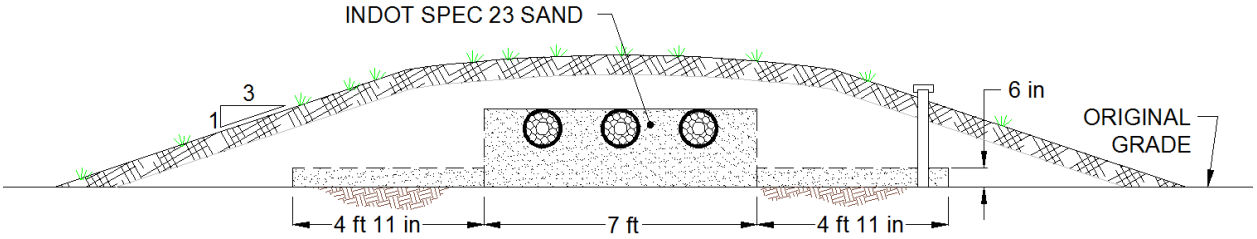

NOTE: *Dimensions as shown reflect a system configuration footprint utilizing construction forms.*

Example IV – Above-ground System – Sloped Site (>½%)

Assume the following baseline specifications:

- 4-bedroom residence
- 0.25 gpd/sf Indiana Rule soil loading rate
- 5% slope on site

Step 1: Determine Infiltrator ATL Total Conduit Length

Per Table 2, a 4-bedroom home calls for a minimum total of 280 linear feet of ATL conduit.

Step 2: Design the System Sand Configuration

Per Table 3, for a 280-foot conduit length, the following configurations could be used, as allowed per site conditions.

- 2 conduit rows wide – 5 ft wide x 144 ft long (720 sf)
- 3 conduit rows wide – 7 ft wide x 97 ft long (679 sf)
- 4 conduit rows wide – 9 ft wide x 72 ft long (648 sf)

Step 3: Calculate the Minimum Basal Area

Per Table 4, for a soil loading rate of 0.25 gpd/sf, the minimum basal area is 1,608 sf.

Step 4: Design Basal Area Footprint

Where site conditions allow the use of 2 ATL conduit rows in the system, the minimum width would be 5 ft and the minimum length would be 144 ft, for a system sand footprint of 720 sf. Since the minimum required 1,608-sf basal area footprint is larger than the 720-sf system sand footprint, the addition of sand extensions is necessary. Minimum sand extensions are calculated as follows:

• *Divide the minimum basal area footprint by the length of the system sand to determine the minimum basal area width.*	1,608 sf ÷ 144 ft = 11.17 ft
• *Subtract the system sand footprint width from the above minimum basal area width to determine the total sand extension required.* ***NOTE:*** *Round up and convert to feet/inches for ease of installation.*	11.17 ft - 5 ft = 6.17 ft (6 ft 2 in)
• *The system must be widened by 6.17 ft, by adding a 6-foot, 2-inch sand extension to the downslope side, resulting in a total basal area footprint width of 11.17 ft.*	11.17 ft X 144 ft = 1,608 sf

Since the minimum ATL conduit length is greater than the maximum trench length of 100 ft, the system will require a center-feed, as shown below.

Example IV (continued)

Cross-Section View

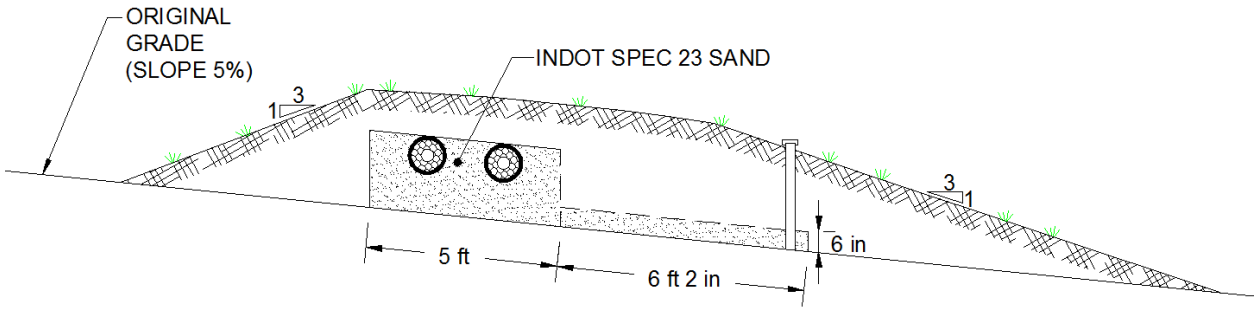

Plan View

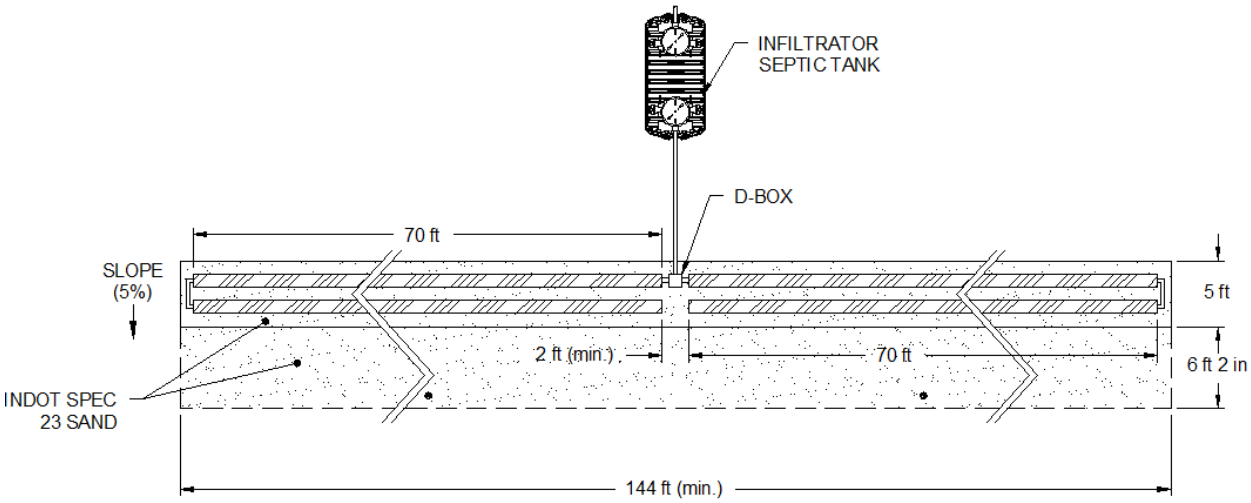

NOTE: *Dimensions as shown reflect a system configuration footprint utilizing construction forms.*
These installation instructions are for the Infiltrator ATL (Advanced Treatment Leachfield) System in Indiana. Infiltrator ATL Systems may only be installed according to the latest version of *410 IAC 6-8.3; 410 IAC 6-10.1, whichever is applicable,* and Indiana Standards for the Infiltrator ATL System Soil Absorption Field Technology, effective June 27, 2025, and local health department requirements.

If unsure of the installation requirements for a site, contact your local health department. If unsure of the use of the Infiltrator ATL System, contact Infiltrator Water Technologies, LLC. The soil and site evaluation and the design of the onsite system must be reviewed, and a construction permit obtained from the local health department before installation.

Before You Begin

Materials and Equipment Needed

- ☐ Infiltrator ATL System conduits
- ☐ System sand
- ☐ PVC pipe and couplings
- ☐ Backhoe
- ☐ Laser, transit or level
- ☐ Shovel and rake
- ☐ 4-inch observation port and cap
- ☐ Endcaps
- ☐ 4" internal corrugated pipe couplers
- ☐ Tape measure

Common practices shall apply to the installation of the Infiltrator ATL System. These include, but are not limited to:

- ☐ avoid soil compaction on the infiltrative surface area, including all areas downslope of a sloped system; and
- ☐ install the Infiltrator ATL System conduit and system sand on the same day that the system footprint is excavated/exposed.

The use of tracked vehicles for material installation is preferred.

Excavating and Preparing the Site

NOTE: *Per Indiana Department of Health requirements, the Infiltrator ATL System may not be installed during periods when the soil is sufficiently wet to exceed its plastic limit, as this causes machinery to smear the soil.*

1. Stake out the locations of tank(s), pipes, conduit rows, and corners of the system to be tilled/excavated, per approved design. Set the elevations as shown on the approved plan. [Note: The proper elevation of solid PVC header line going to each Infiltrator ATL conduit row should be determined to ensure compliance with the required system bottom depth as shown on the approved permit. This height may vary dependent on system height and configuration used.] The site shall be staked so that the:
   (a) Infiltrator ATL System conduit rows will be installed level along their lengths;
   (b) Infiltrator ATL System conduit rows will be installed parallel to the contour of the site; and
   (c) The long axis of the sand bed will be installed parallel to the contour of the site.
2. Install sedimentation and erosion control measures.
   NOTE: *The installation of temporary drainage swales/berms (surface diversions) may be necessary to protect the site during rainfall events.*
3. Excavate, till, or scarify the bed area, per the Rules and system design.
   NOTE: *Avoid introducing machinery to downslopes area of sloped system during installation.*
4. Rake the subsurface system sides (when applicable). Remove large stones and protruding roots.
   NOTE*: Avoid walking on the excavation bottom to prevent compaction and loss of soil structure.*
5. Verify that the excavation is at the design depth, and that the slope from side-to-side and from end-to-end meets the design using a level, transit, or laser.
6. Position forms, if included, per design.
   NOTE: *Forms must be removed prior to installation of soil cover material.*

Installing the System

1. Install the system sand basal layer (6” or 12”) over the entire Infiltrator ATL System area as per design. System sand should be leveled and stabilized prior to introduction of the Infiltrator ATL conduit. Installer should retain records certifying that sand used for system construction meets INDOT Specification 23 requirements.
2. Remove plastic stretch wrap from Infiltrator ATL conduits.
3. Place Infiltrator ATL conduits on the surface of the system sand in the configuration shown on the system design. Using the provided 4-inch-diameter internal pipe couplings, connect the Infiltrator ATL conduits end-to-end to create rows of the required length.
4. For pressure distribution systems, insert IDOH approved pressure pipe into the 4-inch-diameter pipe. The first and last pipe orifices should be facing down, the rest of the orifices should be facing up as shown in Figure 1.2 and described in the Pressure Distribution section of this manual. Pipe orifices must be drilled in pressure pipe and deburred prior to putting into conduit. Pressure checks shall comply with Rule.
5. Infiltrator ATL conduits shall be installed level. A laser level or transit is recommended to ensure proper alignment.
6. Infiltrator ATL conduit rows shall be:
   - installed parallel to any contours; and
   - separated by a minimum of 12 inches of system sand.
7. In serial distribution applications, use of a raised connection is required. Two examples of raised connections are shown below. System designers may deviate from those examples at their discretion.

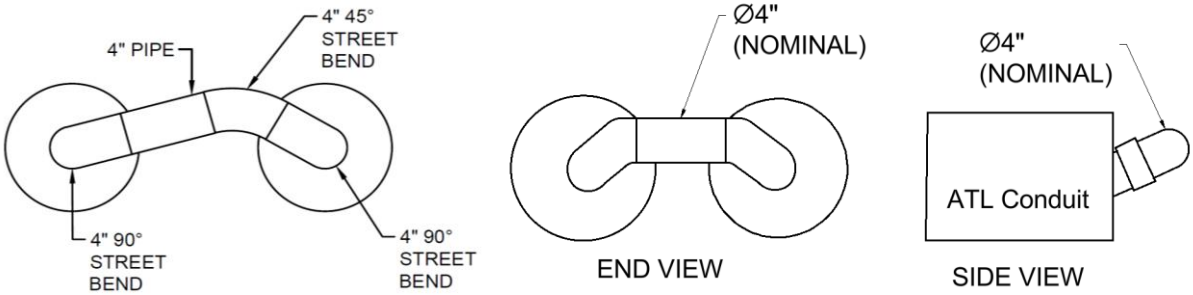

Raised Connection Options for Serial Applications

8. Install a cap on the end of each Infiltrator ATL conduit row that is not connected with piping. For pressure distribution systems, modified end caps are used and a clean out needs to be installed on each parallel line. See Pages 6-8 for details.
9. Install vent, per design. A sample schematic is shown below. Vent installation is described on the following pages.

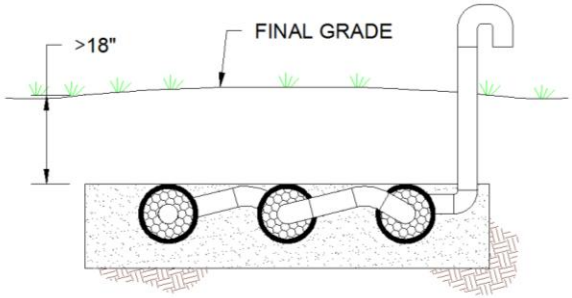

Vent cross-section for all applications when greater than 18” of cover material is placed atop the ATL System.

10. Once the Infiltrator ATL conduit is placed on the surface of the system sand and distribution piping is connected to the conduits per design, additional system sand shall be ladled between and to the top of each of the Infiltrator ATL conduit rows. System sand shall also be installed on each side and at each end of the backfilled Infiltrator ATL conduit rows, per the design. This additional system sand shall be stabilized.
    NOTE: *Infiltrator ATL conduit rows must be kept in alignment with one another during installation. This can be accomplished in a number of ways. Infiltrator recommends the use of stakes, or pre-constructed frameworks, to consistently maintain the required separation.*

Installing Observation Ports

IDOH approval of the ATL System requires that each system (or each bed in a system comprised of more than one bed) shall include an observation port.

1. Cut a 4-inch PVC pipe to the desired length, ensuring the pipe will extend to final grade.
2. Drill a minimum of ten ¼" to ½" holes within ½ to 6 inches of the bottom of the pipe and wrap the bottom end of the pipe in filter fabric.
3. Install the observation pipe at the appropriate location, based on site conditions, and ensure the bottom of the pipe is at the system sand/native soil interface.
4. Install a removable, water-tight, secure cover cap.

Covering the System

NOTE: *Before backfilling, the system shall be inspected and approved by a representative of the local health department, as required by 410 IAC 6-8.3 or 410 IAC 6-10.1, whichever is applicable, and in compliance with local ordinances and procedures.*

1. Material placed around the system sand and atop the Infiltrator ATL conduit may be additional system sand or material meeting the requirements of *410 IAC 6-8.3 or 410 IAC 6-10.1*, whichever is applicable. However, the final 6 inches placed atop or adjacent to the Infiltrator ATL System shall be comprised of soil material cover that will sustain plant growth.
2. Backfill the bed by pushing soil material over the Infiltrator ATL System. It is best to mound several extra inches of soil over the finish grade for crowning and to allow for settling. This also ensures that runoff is diverted away from the system. Keep a minimum of 12 inches of consolidated cover soil over the Infiltrator ATL conduits before driving over the system.
    NOTE: *Do not drive over the system while backfilling with sand.*
3. After the system is covered, the site should be seeded or sodded to prevent erosion. Per 410 IAC 6-8.3 and 410 IAC 6-10.1, this is a requirement in all above-ground system applications.
    NOTE: *If the system is for new home construction, it is important to leave marking stakes along the boundary of the system. This will notify contractors of the system location so they will not cross it with equipment or vehicles.*

Installing Vents

NOTE: *In all applications where the depth of cover material over the ATL System is greater than 18 inches, venting is required by IDOH. For systems in which venting is designed or required, the following instructions are provided.*

For gravity systems:

1. A low vent is installed through an offset adapter at the end of each section, bed, or attached to a vent manifold, with a minimum 3-ft pipe extending above final grade.
2. The internal house plumbing and roof vent act as the high vent for the system.

For pressurized and pump-to-gravity systems:

1. A low vent is installed through an offset adapter at the end of each section, bed, or attached to a vent manifold, with a minimum 3-ft pipe extending above final grade.
2. A high vent must maintain a minimum 10-ft vertical separation from the low vent, and may be installed in one of the following locations:
   - directly at the d-box; or
   - located remotely (along a nearby tree line, or other less conspicuous spot).
3. For pressure distribution systems, a clean out is needed for each line.

NOTE: *In pump-to-gravity applications, the internal house plumbing and roof vent may act as the system's high vent. To accomplish this, a minimum 3-inch diameter pipe must be installed between the d-box and septic tank to bypass the small diameter pressure distribution main.*

Infiltrator ATL System Installer Checklist - Indiana

Property Owner	
Property Address	
Date of Installation	
Installation Contractor	
Date of Inspection	
Number of Bedrooms/Daily Design Flow (gpd) - Design	
Actual Number of Bedrooms/Daily Design – At time of inspection	
History of septic tank pumping	

If a commercial system, inspector should create separate report with details on, at a minimum, design daily flow and effluent strength; actual daily flow and effluent strength.

Inspection Information (By note on separate document):

Installation:

- ☐ Do you have a copy of the ATL System design plan(s)?
- ☐ Does the number of bedrooms in the residence match the design specifications?
- ☐ Is the ATL System in the correct position on the site?
- ☐ Is there at least 6 inches of system sand below the ATL conduit rows?
- ☐ Is the inlet header to ATL conduit row at the correct elevation?
- ☐ Does ATL System sand meet minimum specifications?
- ☐ Has plastic stretch wrap been removed from the ATL conduits?
- ☐ Are the ATL conduit rows level from inlet to outlet?
- ☐ Are ATL conduit rows and the long axis of the sand bed installed parallel to the contour?
- ☐ Are the ATL conduit rows separated by a minimum of 12 inches of system sand?
- ☐ Does installed separation between conduit rows meet the design specifications in the system plans?
- ☐ Is there a minimum of 12 inches of system sand on the outside aspect of the outermost ATL conduit rows?
- ☐ Is there a minimum of 12 inches of system sand extending beyond both ends of the ATL conduit rows?
- ☐ Was the system sand beside and around the ATL conduit rows stabilized prior to installation of cover?
- ☐ Does the depth of the cover material meet the design specifications in the system plans?
- ☐ Is the cover material capable of sustaining plant growth?

Function:

- ☐ What is the condition of the septic tank?
- ☐ What is the condition of the ground surface in the area above the ATL System?
- ☐ What is the condition of the ground surface in the area around the outside of the ATL System? Is there any breakout or runoff?
- ☐ Were steps taken to prevent runoff from entering the ATL System?
- ☐ Is there evidence of damage (traffic loading, etc.) to the area above the ATL System?
- ☐ Is there any settling of the cover material atop the ATL System?
- ☐ Note any other pertinent observations.

Qualified System Inspector Information

Name of System Inspector		
Business Address		
Contact Information (phone; email)		

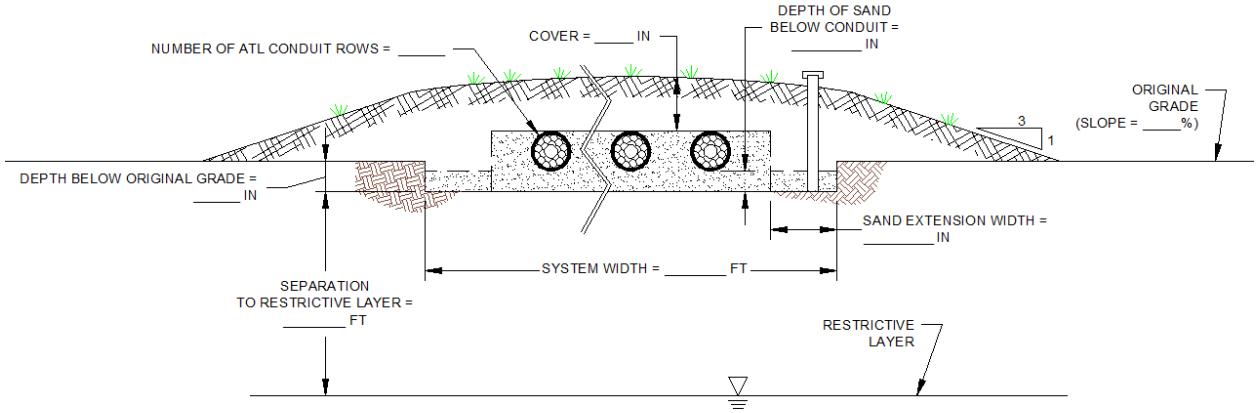

ADDITIONAL PARAMETERS

- SYSTEM CLASSIFICATION (CIRCLE ONE) = SUBSURFACE / ABOVE-GROUND
- SYSTEM LENGTH = _____ FT
- SYSTEM DISTRIBUTION METHOD (CIRCLE ONE) = SERIAL / PARALLEL
- SYSTEM ADDRESS = _____
- PERMIT NUMBER = _____

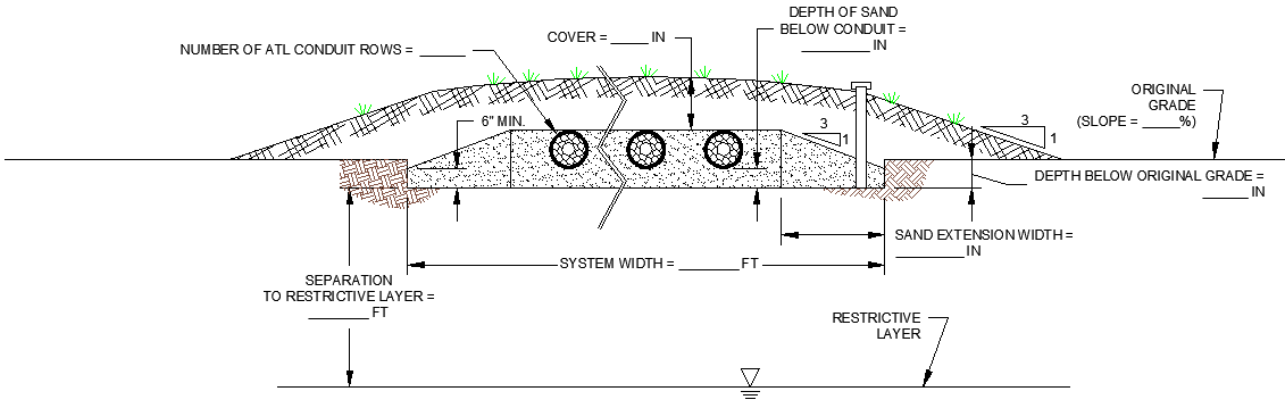

ADDITIONAL PARAMETERS

- SYSTEM CLASSIFICATION (CIRCLE ONE) = SUBSURFACE / ABOVE-GROUND
- SYSTEM LENGTH = _____ FT
- SYSTEM DISTRIBUTION METHOD (CIRCLE ONE) = SERIAL / PARALLEL
- SYSTEM ADDRESS = _____
- PERMIT NUMBER = _____

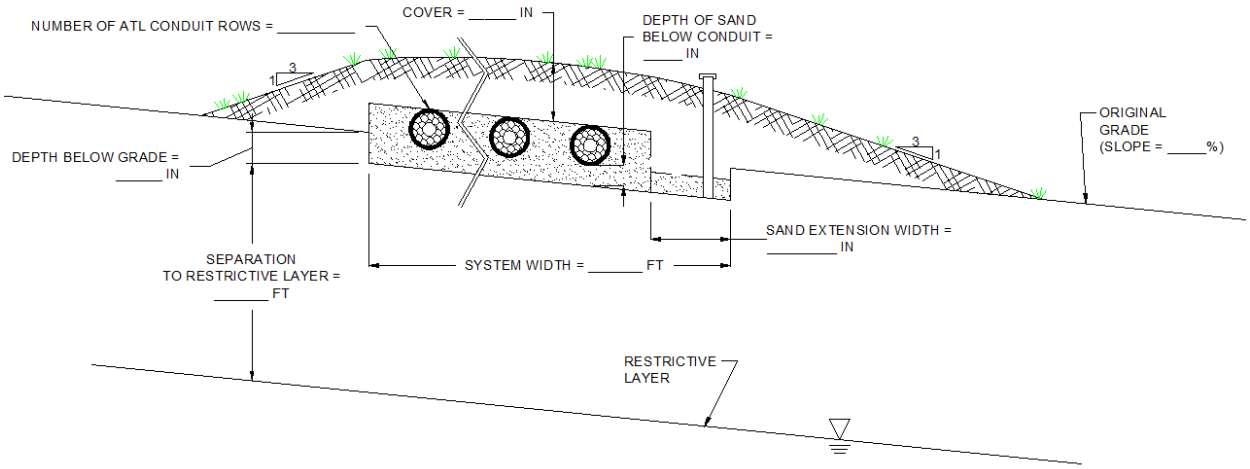

ADDITIONAL PARAMETERS

- SYSTEM CLASSIFICATION (CIRCLE ONE) = SUBSURFACE / ABOVE-GROUND
- SYSTEM LENGTH = _____ FT
- SYSTEM DISTRIBUTION METHOD (CIRCLE ONE) = SERIAL / PARALLEL
- SYSTEM ADDRESS = _____
- PERMIT NUMBER = _____

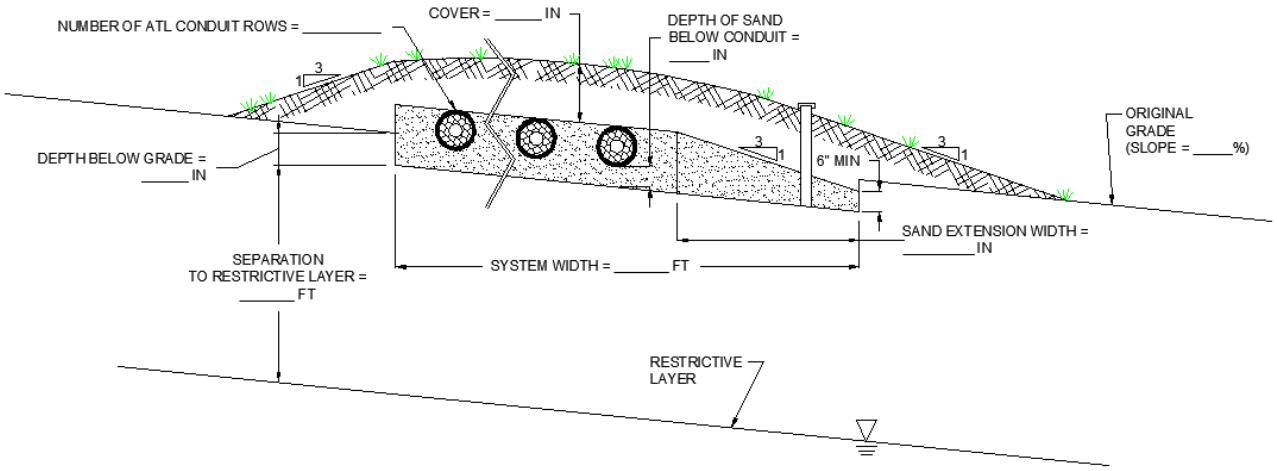

ADDITIONAL PARAMETERS

- SYSTEM CLASSIFICATION (CIRCLE ONE) = SUBSURFACE / ABOVE-GROUND
- SYSTEM LENGTH = _____ FT
- SYSTEM DISTRIBUTION METHOD (CIRCLE ONE) = SERIAL / PARALLEL
- SYSTEM ADDRESS = _____
- PERMIT NUMBER = _____

INFILTRATOR WATER TECHNOLOGIES, LLC ("Infiltrator")

ATL SYSTEM STANDARD LIMITED WARRANTY

(a) The structural integrity of the Infiltrator ATL System conduits manufactured by Infiltrator (collectively referred to as "Units"), when installed and operated in a leachfield of an onsite septic system in accordance with Infiltrator's installation instructions, is warranted to the original purchaser ("Holder") against defective materials and workmanship for one year from the date upon which a septic permit is issued for the septic system containing the Units; provided, however, that if a septic permit is not required for the septic system by applicable law, the one (1) year warranty period will begin upon the date that installation of the septic system commences. In order to exercise its warranty rights, Holder must notify Infiltrator in writing at its corporate headquarters in Old Saybrook, Connecticut within fifteen (15) days of the alleged defect. Infiltrator will supply replacement Units for those Units determined by Infiltrator to be defective and covered by this Limited Warranty. Infiltrator's liability specifically excludes the cost of removal and/or installation of the Units.

(b) THE LIMITED WARRANTY AND REMEDIES IN SUBPARAGRAPH (a) ARE EXCLUSIVE. THERE ARE NO OTHER WARRANTIES WITH RESPECT TO THE UNITS, INCLUDING NO IMPLIED WARRANTIES OF MERCHANTABILITY OR FITNESS FOR A PARTICULAR PURPOSE.

(c) This Limited Warranty shall be void if any part of the ATL System components is manufactured by anyone other than Infiltrator. The Limited Warranty does not extend to incidental, consequential, special or indirect damages. Infiltrator shall not be liable for penalties or liquidated damages, including loss of production and profits, labor and materials, overhead costs, or other losses or expenses incurred by the Holder or any third party. Specifically excluded from Limited Warranty coverage are damage to the Units due to ordinary wear and tear, alteration, accident, misuse, abuse or neglect of the Units; the Units being subjected to vehicle traffic or other conditions which are not permitted by the installation instructions; failure to maintain the minimum ground covers set forth in the installation instructions; the placement of improper materials into the system containing the Units; failure of the Units or the septic system due to improper siting or improper sizing, excessive water usage, improper grease disposal, or improper operation; or any other event not caused by Infiltrator. This Limited Warranty shall be void if the Holder fails to comply with all of the terms set forth in this Limited Warranty.

Further, in no event shall Infiltrator be responsible for any loss or damage to the Holder, the Units, or any third party resulting from installation or shipment, or from any product liability claims of Holder or any third party. For this Limited Warranty to apply, the Units must be installed in accordance with all site conditions required by state and local codes; all other applicable laws; and Infiltrator's installation instructions.

(d) No representative of Infiltrator has the authority to change this Limited Warranty in any manner whatsoever, or to extend this Limited Warranty. No warranty applies to any party other than the original Holder.

* * * * * * *

The above represents the standard Limited Warranty offered by Infiltrator. A limited number of states and counties have different warranty requirements. Any purchaser of Units should contact Infiltrator's corporate headquarters in Old Saybrook, Connecticut, prior to such purchase, to obtain a copy of the applicable warranty, and should carefully read that warranty prior to the purchase of Units.

Infiltrator™ Water Technologies
Part of ADS

P.O. Box 768 • Old Saybrook, CT 06475
800-221-4436